OPTimum IQ 6000

Component Technical Manual

Document Ref 907186-001
Rev - 1
06/2004

Great care has been taken in the preparation of this manual however Tokheim shall not be liable for any misunderstanding, errors and/or loss or defect arising from the use of this manual.

Tokheim shall not be liable for damage to the product, nor for personal or third party injury, caused by incorrect use of the product or by attempts to maintain or to repair the product by parties other than those fully trained by Tokheim or by its accredited third party representatives.

Please contact your nearest service department, at the relevant address printed on the back cover of this manual, should any aspect of this manual be unclear.

© Copyright by Tokheim. All intellectual rights arising from, accruing to,and residing in this manual belong to Tokheim. No part of this document may be reproduced in any form without the express written permission of Tokheim.

Tokheim reserves the right to apply changes to this document and the equipment without further notice.

Issue A

REVISION RECORD

Date	Revision	Page	Issue	Reason
03/06/2004	1	All	A	Original Issue

This page is intentionally blank

CONTENTS

1 INTRODUCTION 1-2
1.1 How to Use this Manual 1-2
1.2 Product Scope 1-2
1.3 Authorised Technicians 1-2
1.4 Contact Information 1-2
1.5 Health & Safety 1-3
1.5.1 Safety Checklist 1-3
1.5.2 Duties of the Employees 1-3
1.5.3 Hazards 1-4
1.5.4 Warning Signs 1-4
1.5.5 Personal Protective Equipment (PPE) 1-6
1.6 Standards & Certificates 1-6
1.7 Nomenclature 1-7

2 PRODUCT INFORMATION 2-2
2.1 System Description 2-2
2.2 Key Characteristics 2-3
2.3 Main Components 2-3
2.3.1 Receipt Printer 2-3
2.3.2 Display & Touch Sensor 2-4
2.3.3 Manual Card Reader 2-4
2.3.4 Banknote Acceptor (BNA) 2-4
2.3.5 PIN-pad Configurations 2-5
2.4 OPTimum IQ Dimensions 2-6
2.4.1 OPTimum IQ Island Terminal Dimensions 2-6
2.4.2 OPTimum IQ Island Terminal Footprint 2-6
2.4.3 OPTimum IQ BNA Dimensions 2-7
2.4.4 OPTimum IQ BNA Footprint 2-7
2.4.5 OPTimum IQ Retrofit Dimensions 2-8
2.5 OPT IQ Wiring Diagrams 2-9
2.5.1 Wiring Overview OPT IQ 6000 BIM 2010 2-9
2.5.2 Wiring Overview OPT IQ 6000 SPIN 2-10
2.5.3 Wiring Overview OPT IQ 6000 CRYPTO 2-11

3 INSTALLATION OF THE OPT IQ BNA 3-2
3.1 Ground Frame Installation Procedure 3-2
3.2 Lifting and Placement Procedure 3-3

4 PARTS LIST 4-3
4.1 OPT-IQ BIM 2010 with Keypad Assembly 4-3
4.2 OPT-IQ SPIN with Keypad Assembly 4-5
4.3 OPT-IQ SBC SPIN with Keypad Assembly 4-7
4.4 OPT-IQ CRYPTO 100 Assembly 4-9
4.5 OPT-IQ CRYPTO 200 Assembly 4-11
4.6 OPT-IQ SBC Assembly 4-13
4.7 OPT Drawer without Keypad Assembly 4-15
4.8 OPT-IQ Support Assembly 4-17
4.9 OPT-IQ Capacitive Touch Screen Assembly 4-19
4.10 OPT-IQ Drawer Alarm Assembly 4-21

CONT.

Issue A

4 PARTS LIST /
4.11 OPT-IQ Printer Assembly 4-23
4.12 OPT-IQ Lock Assembly 4-25
4.13 OPT-IQ Raincover Assembly 4-27
4.14 OPT-IQ VGA Backlight Assembly 4-29

Issue A

CONTENTS

1 INTRODUCTION 1-2
1.1 How to Use this Manual 1-2
1.2 Product Scope 1-2
1.3 Authorised Technicians 1-2
1.4 Contact Information 1-2
1.5 Health & Safety 1-3
1.5.1 Safety Checklist 1-3
1.5.2 Duties of the Employees 1-3
1.5.3 Hazards 1-4
1.5.4 Warning Signs 1-4
1.5.5 Personal Protective Equipment (PPE) 1-6
1.6 Standards & Certificates 1-6
1.7 Nomenclature 1-7

Issue A

1 INTRODUCTION

1.1 How to Use this Manual

It is recommended that all relevant persons familiarise themselves with the contents of this manual prior to carrying out any operations or procedures.

This manual is divided into sections which are described as follows: -

Section 1 - Introduction

This section contains information on how to use the manual, the scope of equipment covered, recommendations on qualified technicians and contact information. It also includes relevant health and safety information required for the safe practice of common maintenance procedures.

Section 2 - Product Information

This section contains the system descriptions and operating principles of the various OPT IQ options including Dispenser Integrated Terminals (DITs), Credit Card Terminals (CCTs) and Bank Note & Credit Card Terminals (BCTs).

Section 3 - Installation of the OPTimum IQ BNA

This section provides the necessary information for the installation of the OPT IQ BNA.

Section 4 - OPTimum IQ Parts List

This section details the assembly drawings and part identification lists for the various OPTimum IQ options.

1.2 Product Scope

This manual is designed to cover the OPTimum IQ option in Quantium T-range dispensers.

1.3 Authorised Technicians

Only qualified technicians familiar with the contents of this manual should carry out the procedures contained herein.

WARNING : ANY ATTEMPTS TO CARRY OUT THE PROCEDURES OF THIS MANUAL, BY UNQUALIFIED OR UNAUTHORISED PERSONS, MAY RESULT IN SERIOUS INJURY OR LOSS OF LIFE.

NOTE : THIS MANUAL IS NOT INTENDED TO REPLACE THE SERVICES OF A FULLY QUALIFIED TECHNICIAN.

1.4 Contact Information

For information relating to the contents of this manual please contact: -

Technical Author
Tokheim UK Ltd.
Dundee, Scotland

For technical assistance please contact the appropriate service division listed on the back cover of this manual.

1.5 Health & Safety

1.5.1 SAFETY CHECKLIST

- It is obligatory that this checklist be fully complied with during all work at the petrol station, particularly construction or repair work.
- It is the duty of the contractor to ensure that all workers employed by him obey each and all of the relevant laws, directives and other regulations.

Areas where special caution is required

- The insides of tanks, tubes, dome shafts, filling shafts, change over shafts, vessels and dispensers.
- All areas in which fuel vapour that is heavier than air can accumulate, e.g. fuel separator, draining shafts, low located rooms, cellars, excavations, pipe trenches etc.
- The areas around the outlets of tank ventilation pipes, especially during the filling phase.
- All areas near dispensers, tanker lorries and other vehicles while they are being tanked up, and particularly when there is a lack of wind.
- A radius of 1.0 metres around petrol carrying pipes, as well as pipes that are not vapour free.
- Silt traps.

1.5.2 DUTIES OF THE EMPLOYEES

- To ensure optimal accident prevention in our company, in addition to general rules applying to worker's protection, it is necessary to take into account all the national protection of workers legislation and to actively support all measures which enhance safety standards.
- It is an employee's duty to follow all company directives regarding the prevention of accidents, unless such directives can be proved to be unfounded.
- Employees should not follow any instructions that go against safety standards.
- Employees are only permitted to use equipment for its original purpose, and this is defined by the company alone.
- If an employee detects equipment that is deficient in terms of safety, he shall eliminate this deficiency immediately. If such safety rectification is not part of his defined area of activities, or if his knowledge is insufficient to carry out such work he must immediately inform his superior about the detected safety deficiency.

This equally applies to:

1) **Work Materials** which have not been correctly packed or correctly marked in order to meet safety requirements.
2) **Work Methods** or work processes which have not been correctly coordinated or controlled in order to meet safety requirements.

Issue A

3) **Where dangerous activities are carried out by several persons**, the need for a permanent faultless communication between them in order to avoid dangerous events shall require the appointing of one person in order to carry out overall supervision.

1.5.3 HAZARDS

Prior to starting work, the dispenser must be isolated (i.e. entirely disconnected from the mains supply) and the mains supply switch locked in the OFF position. The submerged pump (if applicable) and control signals from the dispenser must also be isolated. This is done to provide safety for the technician. As a further precaution, switch off the mains supply in the service station shop and place a clear notice on the switch to avoid it being turned on again inadvertently.

WARNING : THE CONNECTION AND DISCONNECTION OF ELECTRICAL CONNECTIONS MAY ONLY BE CARRIED OUT BY QUALIFIED PERSONNEL AUTHORISED FOR SUCH ACTIVITIES. WORK IN DANGEROUS AREAS MUST BE MADE SAFE BY OBSERVING ALL THE NATIONAL SAFETY REQUIREMENTS IN FORCE.

It is not permitted to put a fuel dispenser into operation before an authorised official has inspected it and released it. This depends upon the national regulations in force.

Dismantled packaging and cladding must be stored in such a way as to avoid damage to components or injuries to persons. Covers that can be opened, such as the calculator housing, should be handled with care. Ensure that the retaining catch is placed in the correct position to prevent the cover falling onto the head of the service engineer or other persons in the area.

At unattended service stations, every end-user should be able to read the User Instructions. They should be visible on a notice board or integrated into the DIT and should be sufficiently well lit so that they can be read at night.

At unattended service stations break away couplings must always be used to reduce the danger caused by a motorist driving off with the nozzle still in the tank.

1.5.4 WARNING SIGNS

The following warning signs are fitted as standard, on the dispenser, however they may vary according to individual country requirements or customer specifications.

SIGN	MEANING	POSITION
	Do not use mobile phones	Visible from both sides of dispenser
	Naked flames and smoking forbidden	Visible from both sides of dispenser
	Do not spill fuel on the ground	Visible from both sides of dispenser
	Stop vehicle engine	Visible from both sides of dispenser
	Trucks only	At Diesel high speed dispensers near the nozzle boots
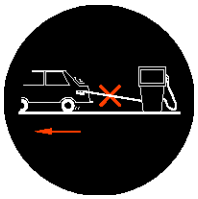	Do not drive away with nozzle in tank	Visible from both sides of dispenser
For more information see User Manual available at this station		Next to User Instructions near the nozzle boot

Issue A

1.5.5 PERSONAL PROTECTIVE EQUIPMENT (PPE)

PROTECTIVE CLOTHING

The following clothing should be worn **at all times** during installation and maintenance procedures:-

- Protective helmet.
- Protective shoes (conductive).
- Protective gloves and/or protective hand cream.
- Anti static clothing.
- Eye protection.

SAFETY EQUIPMENT FOR WORKING IN HAZARDOUS AREAS

The following safety equipment is required for working in hazardous areas:-

- Only spark free tools are permitted for work on dispensers.
- Work on bearings is only permitted using the standard workshop tools authorised for this kind of work.
- The use of all electrical tools is strictly prohibited.
- Only the use of explosion protected work lights is permitted.
- The use of telecommunications equipment in hazardous areas is strictly prohibited.

SAFETY INSTRUCTIONS

The following safety instructions must be adhered to during installation and maintenance procedures:-

- Inhalation of petrol vapour must be avoided. Suitable precautions must be taken and where necessary respirators used.
- Avoid direct contact of fuel with the skin.
- Use suitable protective clothing, protective gloves and/or protective hand cream.
- Avoid fuel spills.
- No smoking, no naked flames are permitted.
- Long hair and ties can get caught in moving parts. Hair must be suitably covered.

1.6 Standards & Certificates

Tokheim OPTimum and BNA standalone units are constructed in conformity with the requirements of all the applicable European Directives (Machinery 98/37/EC; EMC 89/336/EEC; ATEX 94/9/EC).

Dispenser integrated terminals are incorporated into Tokheim fuel dispensers which conform to the essential requirements of the Machinery Directive 98/37/EC.

The components used within the OPTimum, including connection facilities, are selected in accordance with the European Standard EN 50014 (Electrical apparatus for potentially explosive atmospheres), and the supplementary Standards listed therein.

The production and end test is controlled through the Quality Assurance systems within the Tokheim Manufacturing Centres.

1.7 Nomenclature

The various abbreviations used in thie manual are described as follows:-

DIT	Dispenser Integrated Terminal
OPT	Outdoor Payment Terminal
CCT	Credit Card Terminal
BCT	Bank Note & Credit Card Terminal
BNA	Bank Note Acceptor

This page is intentionally blank

CONTENTS

2 PRODUCT INFORMATION 2-2
2.1 System Description 2-2
2.2 Key Characteristics 2-3
2.3 Main Components 2-3
2.3.1 Receipt Printer 2-3
2.3.2 Display & Touch Sensor 2-4
2.3.3 Manual Card Reader 2-4
2.3.4 Banknote Acceptor (BNA) 2-4
2.3.5 PIN-pad Configurations 2-5
2.4 OPTimum IQ Dimensions 2-6
2.4.1 OPTimum IQ Island Terminal Dimensions 2-6
2.4.2 OPTimum IQ Island Terminal Footprint 2-6
2.4.3 OPTimum IQ BNA Dimensions 2-7
2.4.4 OPTimum IQ BNA Footprint 2-7
2.4.5 OPTimum IQ Retrofit Dimensions 2-8
2.5 OPT IQ Wiring Diagrams 2-9
2.5.1 Wiring Overview OPT IQ 6000 BIM 2010 2-9
2.5.2 Wiring Overview OPT IQ 6000 SPIN 2-10
2.5.3 Wiring Overview OPT IQ 6000 CRYPTO 2-11

Issue A

2 PRODUCT INFORMATION

2.1 System Description

The OPTimum IQ 6000 product range is designed to provide pay-at-the-pump facilities with a country specific user interface. The OPTimum IQ range includes dispenser-integrated payment terminals and stand-alone island payment terminals for banknote and/ or credit card payment. The range consists of the following:-

•OPTimum IQ Integrated

The OPTimum IQ Integrated is a payment terminal that is completely integrated in Tokheim dispensers either in the factory or in the field as a retrofit option for Q400T/500T range of dispensers. It is also available as option in the Euro-Premier Dispenser.

• OPTimum IQ Retrofit

The OPTimum IQ Retrofit is specially designed for field retrofit as an 'add-on' unit to upgrade installed dispensers. Its compact design means it can also be used as an upgrade for third party dispensers.

• OPTimum IQ Card Terminal

The OPTimum IQ Card Terminal is an island terminal for cards only. Depending on the configuration, it will be able to accept magnetic-stripe-cards and/or chipcards. The design combines an excellent presence without obstructing the view of the forecourt for kiosk personnel. Stand-alone island terminals are for cards only (no banknotes).

•OPTimum IQ BNA Terminal

The OPTimum IQ BNA terminal is a stand-alone island terminal for banknotes (and optional credit cards). Depending on the type of configuration, it can accept up to 20 different banknotes in four different ways of introduction.

Issue A

2.2 Key Characteristics

All Outdoor Payment Terminals (OPT) have the following key characteristics:-

- Modular micro-processor hardware
- Off-the-shelf real-time operating system
- High speed thermal ticket printer with automatic cutter and “drop down” ticket bin
- Manual readers for magnetic stripe cards and/or chip cards
- Tokheim Crypto 100 or other security PIN-pads (refer to section 2.3.5)
- VGA color LCD screen with vandal proof touch sensor
- Tokheim proprietary interface to Tokheim site controller
- Modular design harmonised with dispenser design
- Separate mains supply for lighting
- Audio-signal/feedback
- Optional Battery Back-up
- Alarm Contacts
- Optional Privacy shield

2.3 Main Components

The OPT consists of a number of modules which can be combined depending on the type of the calculator and the number of products and options used. The OPT is supplied with standard parts (printer and temperature control unit), optional pre-defined parts (card reader and power supply) and country-specific or customer-specific parts (pinpads etc.).

The main components of the OPT are:-

- Receipt Printer (refer to section 2.3.1)
- Display & Touch sensor (refer to section 2.3.2)
- Card Reader (refer to section 2.3.3)
- Banknote Acceptor (refer to section 2.3.4)
- PIN-pad Configurations (refer to section 2.3.5)

2.3.1 RECEIPT PRINTER

All OPTimum IQ units are fitted with the standard receipt printer, automatic cutter and printer controller board. A drop-down ticket bin is also supplied to avoid the risk of paper jams caused by customers removing the ticket prior to completion of cutting.

The basic characteristics of the receipt printer are as follows:-

- Printing Method : Thermal dot line printing (448 dots per line)
- Effective Printing Width : 56mm
- Printing Speed : 400 dot lines per second
- Paper Feed Method : Friction - Pitch 0.125mm per minute force 100g
- Motor : 4 phase step motor 24V DC (+/- 5%)

- Printing Head Circuit : 5V DC (+/- 5% 100mA)
- Printing Head Driving : 5V DC (+/- 5% 1.7A at 25% duty)
- Paper Width : 59.5mm (+/- 5mm)
- Paper Roll Diameter : <113mm
- Temperature Detector : By thermistor
- Head Open Detection : By Mechanical Switches
- Paper End Detection : By Photo Interruptor
- Paper Replacement : Auto Feed (once new roll in position)
- Ambient Temperature Range : -25°C to +50°C (with direct sun radiation the printer can temporarily stop working at an ambient temperature of 45°C)

2.3.2 DISPLAY & TOUCH SENSOR

As the displays and keyboards are required to be country-specific, the OPTimum IQ has been designed accordingly to allow a selection of keypads and displays to be fitted. In addition to country-specific security requirements, the keyboards and displays have the following options:-

- 6.4” 1/4 VGA colour screen
- Capacitive touch sensor with toughened anti-glare glass

2.3.3 MANUAL CARD READER

The Card Reader is available for magnetic stripe cards and/or chip cards. The main characteristics are:-

- Magnetic Cards : Read track 1,2,3 with ISO conformity
- Recording Method : FM decoding (F2F)
- Card Feeding Method : Manual (push/pull)
- Card Feeding Speed : 8-127cm per second
- Service Life : >500,000 passes

2.3.4 BANKNOTE ACCEPTOR (BNA)

For security reasons, Tokheim does not manufacture a dispenser-integrated Bank Note Acceptor. The Bank Note Acceptor is manufactured as a stand-alone island terminal with the cash unit located in a specially reinforced compartment which is not accessible from the installation/service area.

The BNA has the following characteristics:-

- Reinforced money compartment with separate door and safe lock
- Billcoin BNA is supplied with money bag and the Mars Sodeco is supplied with stacker and cashbox
- Standard reader for up to four different notes (Note : images are stored in Eeprom); or the upgraded reader which handles up to 13 different banknotes
- Multi-note inlet

- Anti-magnetic or IC card inlet
- Average acceptance rate of 98%
- Service life approximately 1 million notes

2.3.5 PIN-PAD CONFIGURATIONS

The OPTimum IQ range components vary by country and in accordance with local and/or national requirements.

SECURITY KEYPAD OPTIONS

BIM 2010

Security PIN-pad with integrated display.

Ambient Temperature Range : -25°C to +50°C (with direct sun radiation the BIM 2010 can temporarily stop working at an ambient temperature of 45°C)

SPIN

Security PIN-pad with integrated display. This configuration is uniquely for the Belgium market.

CRYPTO 100

Tokheim proprietary capacitive toughened glass security PIN-pad.

CRYPTO 200

Tokheim proprietary security PIN-pad.

Issue A

2.4 OPTimum IQ Dimensions

2.4.1 OPTIMUM IQ ISLAND TERMINAL DIMENSIONS

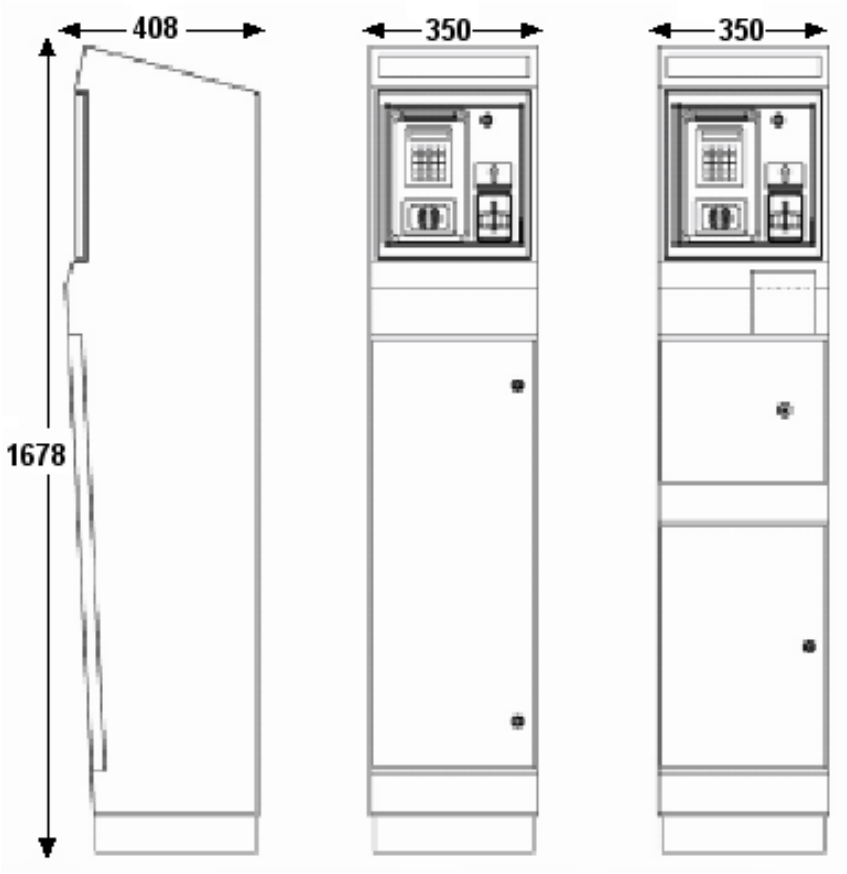

2.4.2 OPTIMUM IQ ISLAND TERMINAL FOOTPRINT

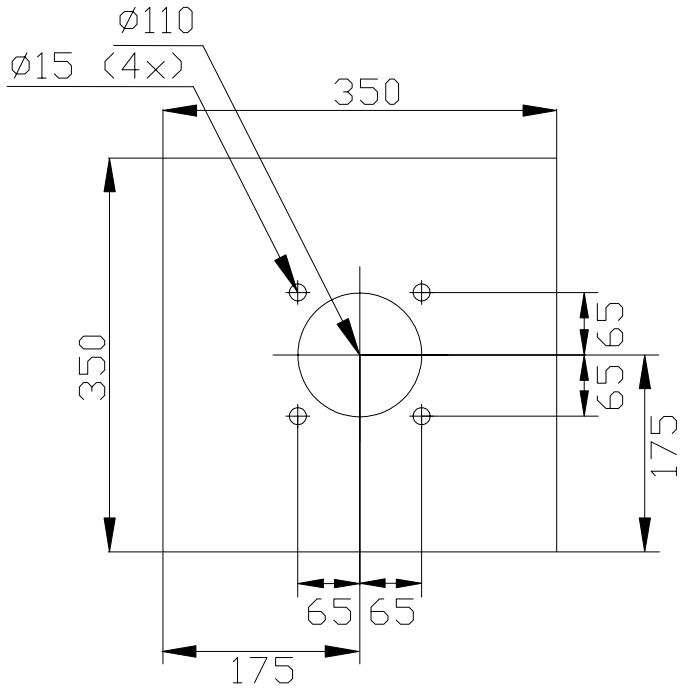

Issue A

2.4.3 OPTIMUM IQ BNA DIMENSIONS

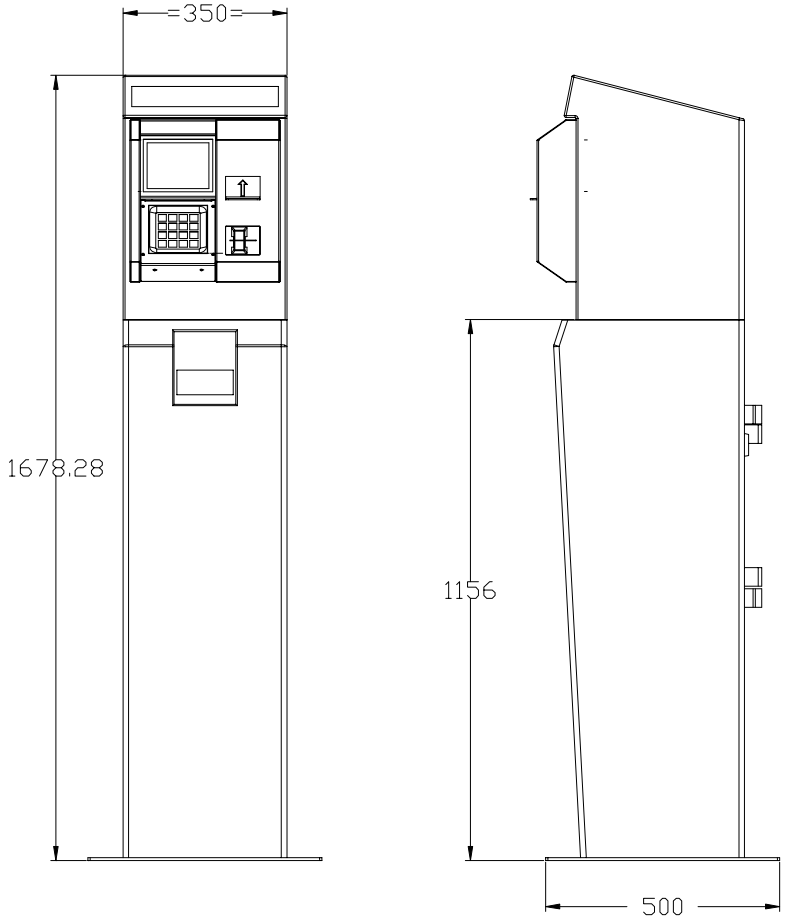

2.4.4 OPTIMUM IQ BNA FOOTPRINT

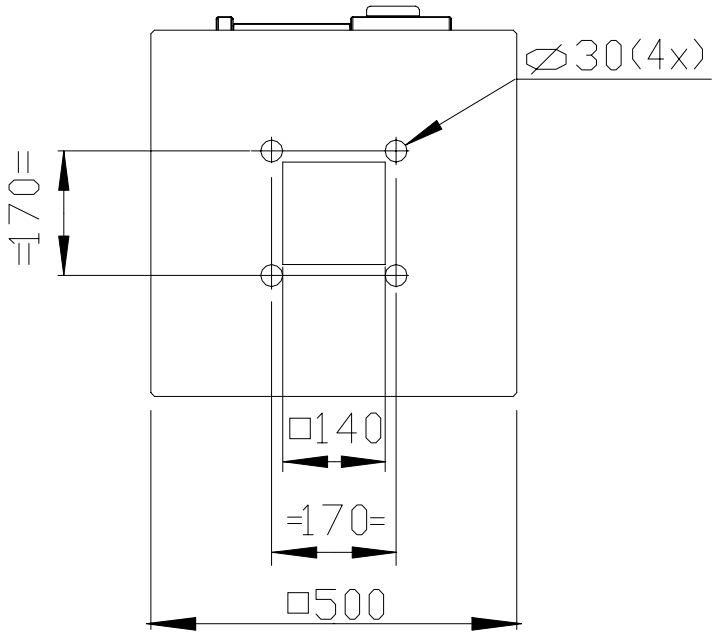

Issue A

2.4.5 OPTIMUM IQ RETROFIT DIMENSIONS

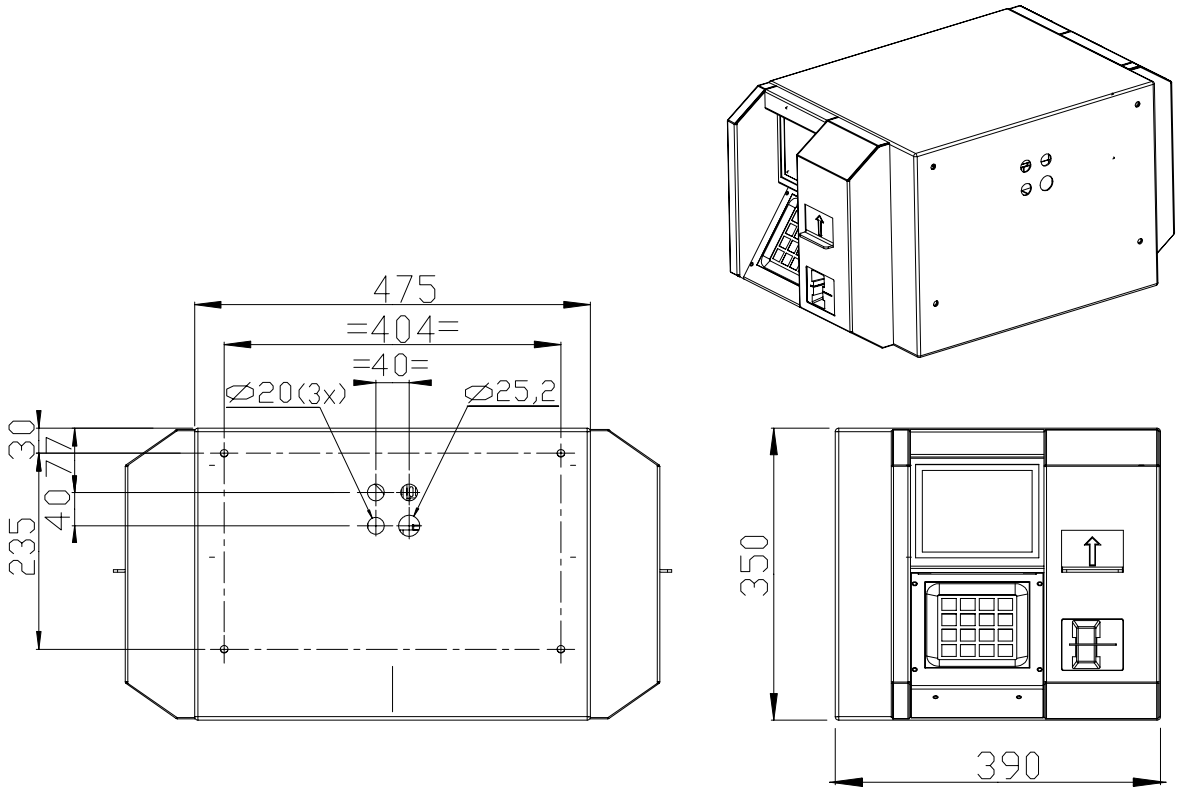

Issue A

2.5 OPT IQ Wiring Diagrams

2.5.1 WIRING OVERVIEW OPT IQ 6000 BIM 2010

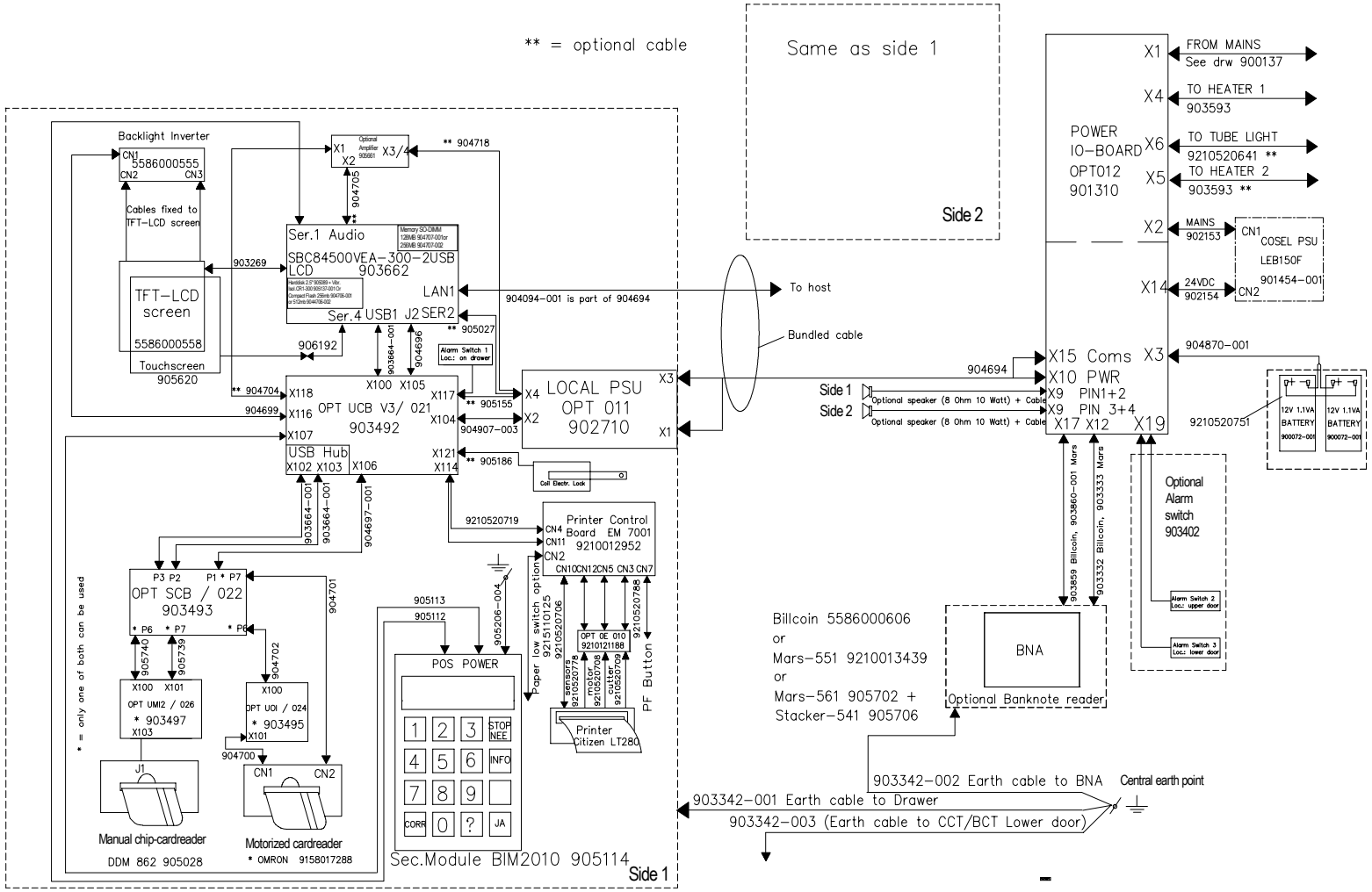

2.5.2 WIRING OVERVIEW OPT IQ 6000 SPIN

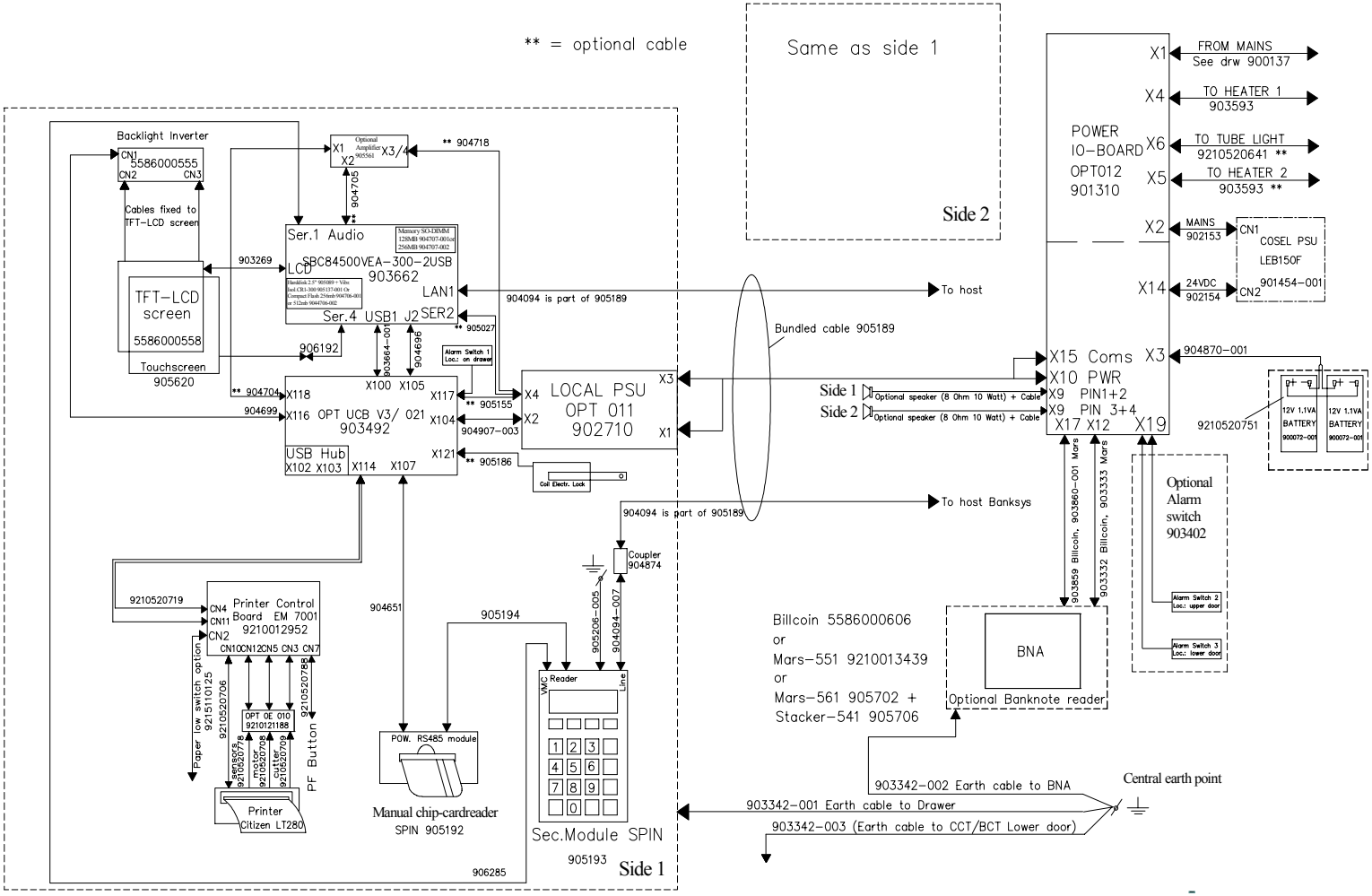

2.5.3 WIRING OVERVIEW OPT IQ 6000 CRYPTO

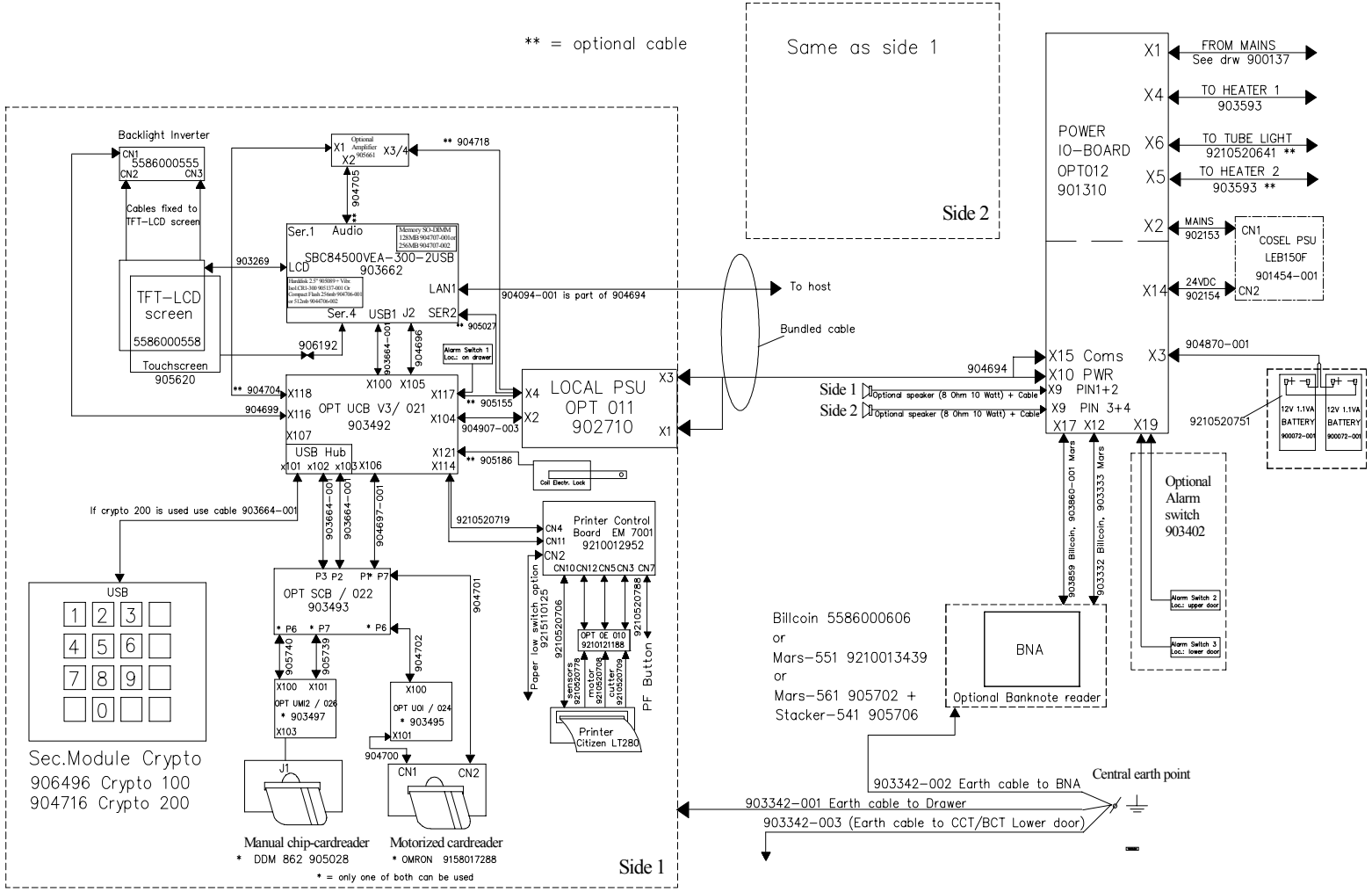

This page is intentionally blank

CONTENTS

3 INSTALLATION OF THE OPT IQ BNA 3-2
3.1 Ground Frame Installation Procedure 3-2
3.2 Lifting and Placement Procedure 3-3

Issue A

3 INSTALLATION OF THE OPT IQ BNA

This section describes the two procedures to be followed for the safe installation of the BNA IQ terminal:

- Procedure for installation of the ground frame in the concrete floor (refer to section 3.1)
- Procedure for the lifting and placement of the BNA terminal (refer to section 3.2)

Important Installation Notes/Remarks

The IQ BNA must be installed at least 20 cm from the dispenser.

The IQ BNA must be installed at least 2 metres from the ground-tank air outlet.

Ensure that the base of the BNA is closed in order to prevent the 'chimney' effect i.e. when vapour is sucked through an electrical wiring pipe into the BNA terminal causing a potentially hazardous situation.

Weight of the complete IQ BNA terminal is 225 kg. Refer to Figure 5 for the dimensions.

Part number of the lifting device is 907389.

3.1 Ground Frame Installation Procedure

When working on the site, ensure that the general safety procedures are followed.

INSTRUCTIONS:

1) The ground frame is delivered together with the BNA IQ housing (see Figure 1).
2) Locate the ground frame in the concrete according to the indicated picture (see Figure 2).
3) Locate the pipe for the electrical wiring cables in the centre of the ground frame.
4) Ensure the ground frame is positioned completely horizontal.
5) Ensure the ground frame upper plate is positioned just above the concrete.

Figure 1 - Ground frame is completely welded

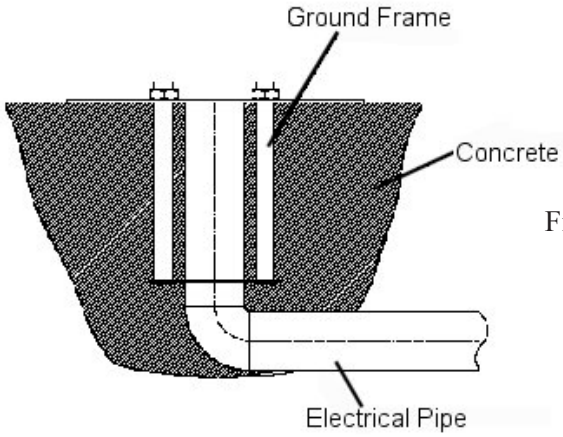

Figure 2 - Position of ground frame and electrical pipe in theconcrete

Issue A

3.2 Lifting and Placement Procedure

Refer to Figure 5 for the outer dimensions of the IQ BNA terminal.

1) The complete drawer must be removed prior to lifting the BNA terminal.
2) The terminal must be lifted with the door open (see Figure 4).
3) Inspect the lifting device for signs of wear or damage.
4) When positioning the metal lifting brackets, use suitable protection to ensure the paintwork will not be damaged.
5) Position part A in the door-opening at the back of the BNA terminal (see Figures 3 and 4).

   Note : Ensure that part A fits correctly in the door-opening.
6) Hold the lifting belt over the unit keeping it flat.

   Note : Do NOT let the belt twist.
7) Position part B in the front opening of the terminal (Figures 3 and 4).

   Note : Ensure that part B fits correctly in the front opening.
8) Place the lifting belt onto the lifting hook or fork of the forklift truck.
9) Before lifting the unit clear of the ground, check that the lifting brackets are secure and in the correct position on both sides of the unit.
10) Lift the unit slowly and carefully to maintain good balance.

    Note : Beware of the open door.
11) Locate the BNA terminal directly above the ground frame.
12) Manually position the unit before lowering slowly onto the ground frame.

Note: Ensure that the lifting belt remains under until the terminal placement is completed.

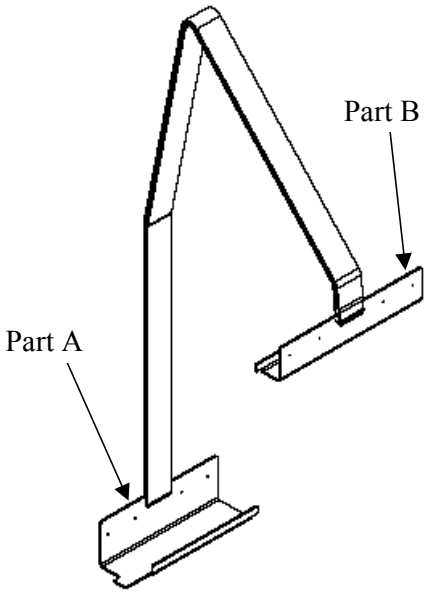

Figure 3 - Position of parts A and B

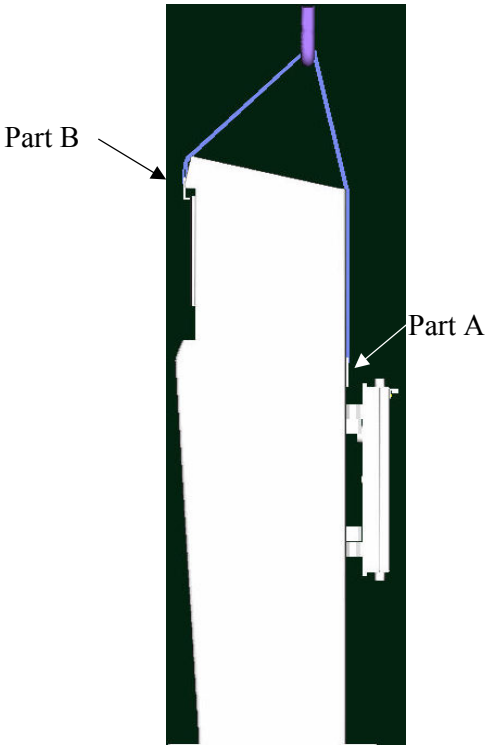

Figure 4 - Lifting with door open

Issue A

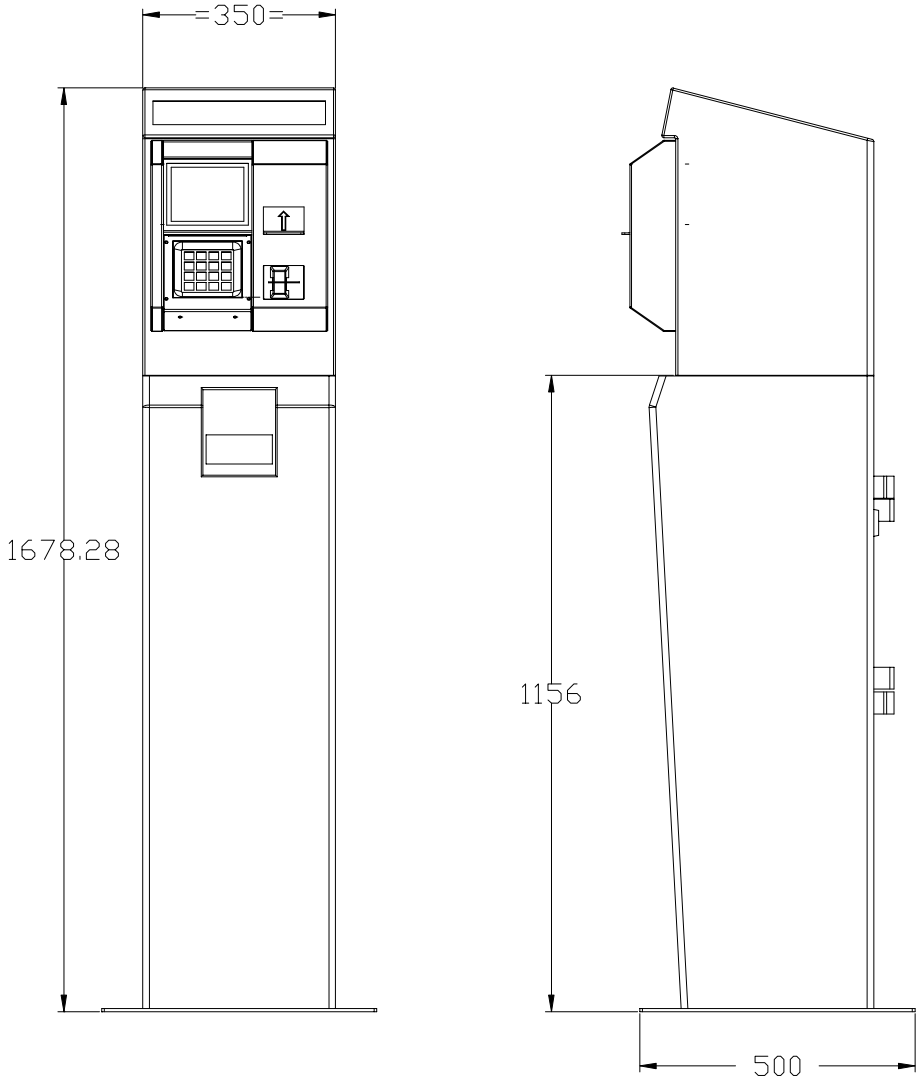

Fig 5 - OPT IQ BNA Dimensions

Issue A

CONTENTS

4 PARTS LIST 4-2
4.1 OPT-IQ BIM 2010 with Keypad Assembly 4-2
4.2 OPT-IQ SPIN with Keypad Assembly 4-4
4.3 OPT-IQ SBC SPIN with Keypad Assembly 4-6
4.4 OPT-IQ CRYPTO 100 Assembly 4-8
4.5 OPT-IQ CRYPTO 200 Assembly 4-10
4.6 OPT-IQ SBC Assembly 4-12
4.7 OPT Drawer without Keypad Assembly 4-14
4.8 OPT-IQ Support Assembly 4-16
4.9 OPT-IQ Capacitive Touch Screen Assembly 4-18
4.10 OPT-IQ Drawer Alarm Assembly 4-20
4.11 OPT-IQ Printer Assembly 4-22
4.12 OPT-IQ Lock Assembly 4-24
4.13 OPT-IQ Raincover Assembly 4-26
4.14 OPT-IQ VGA Backlight Assembly 4-28

Issue A

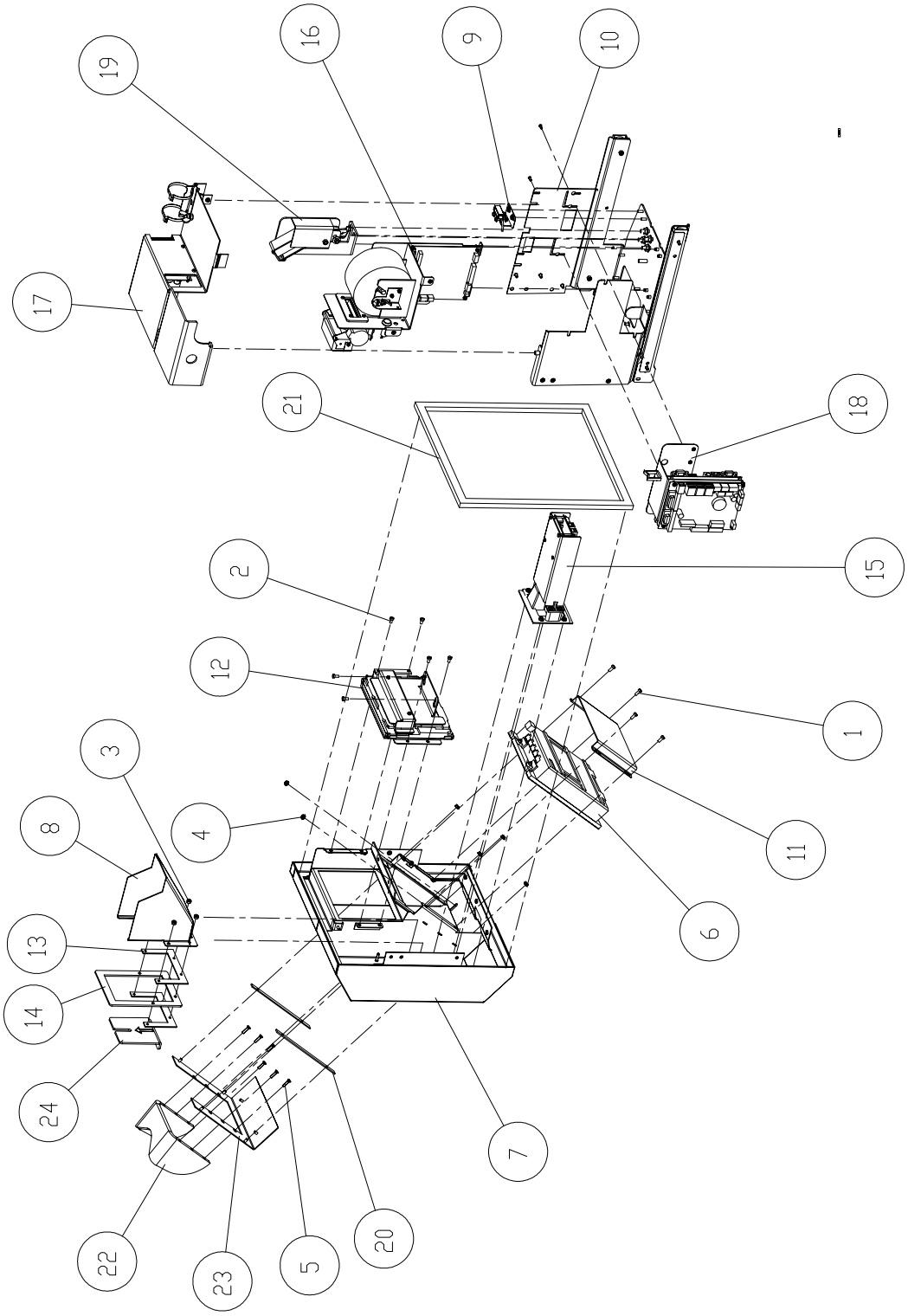

Issue A

4 PARTS LIST

4.1 OPT-IQ BIM 2010 with Keypad Assembly

Item No	Description	Désignation Français	Part No	Comments
1	Screw SCH M4x10	M4 x 10 VIS CS / CLS	900007-001	
2	Screw SCH M4x8	M4 x 8 VIS CS / CLS	900007-003	
3	Nut Hex Prev Torque M4	Ecrou Autobloquant M4	900012-004	
4	Nut Hex Self Lock M4	Ecrou serpress M4 x 3	900013-001	
5	Screw SCS M4X16	Vis FS M4X16	900014-007	
6	Security Module BIM 2010	Security Modul BIM 2010	905114	
7	OPT IQ sm-fascia weldassy	OPT IQ sm-fascia weldassy	905338	
8	OPT-IQ ticket bin	OPT-IQ ticket bin	905371	
9	Drawer Alarm assy	Drawer Alarm assy	905379	Refer to Page 3-20
10	OPT IQ support assy	OPT IQ support assy	905581	Refer to Page 3-16
11	OPT IQ BIM2010 bkt	OPT IQ BIM2010 bkt	905582	
12	OPT IQ capacit. t-screen assy	OPT IQ capacit. t-screen assy	905583	Refer to Page 3-18
13	OPT-IQ printer box seal	OPT-IQ printer box seal	905586	
14	OPT IQ printer door guide	OPT IQ printer door guide	905587	
15	OPT IQ ddm assy	OPT IQ ddm assy	905588	
16	IQ printer assy	IQ printer assy	905591	Refer to Page 3-22
17	OPT IQ raincover assy	OPT IQ raincover assy	905592	Refer to Page 3-26
18	OPT IQ sbc assy	OPT IQ sbc assy	905595	Refer to Page 3-12
19	Lock assy IQ	Lock assy IQ	905624	Refer to Page 3-24
20	Insert seal OPT-IQ	Insert seal OPT-IQ	906084	
21	Seal drawer front IQ OPT	Seal drawer front IQ OPT	906289	
22	OPT IQ insrt BIM2010+priv.shld	OPT IQ insrt BIM2010+priv.shld	906823	
23	Print Door MIL-DIT	Imprimeur Tiroir MD	9400021378	

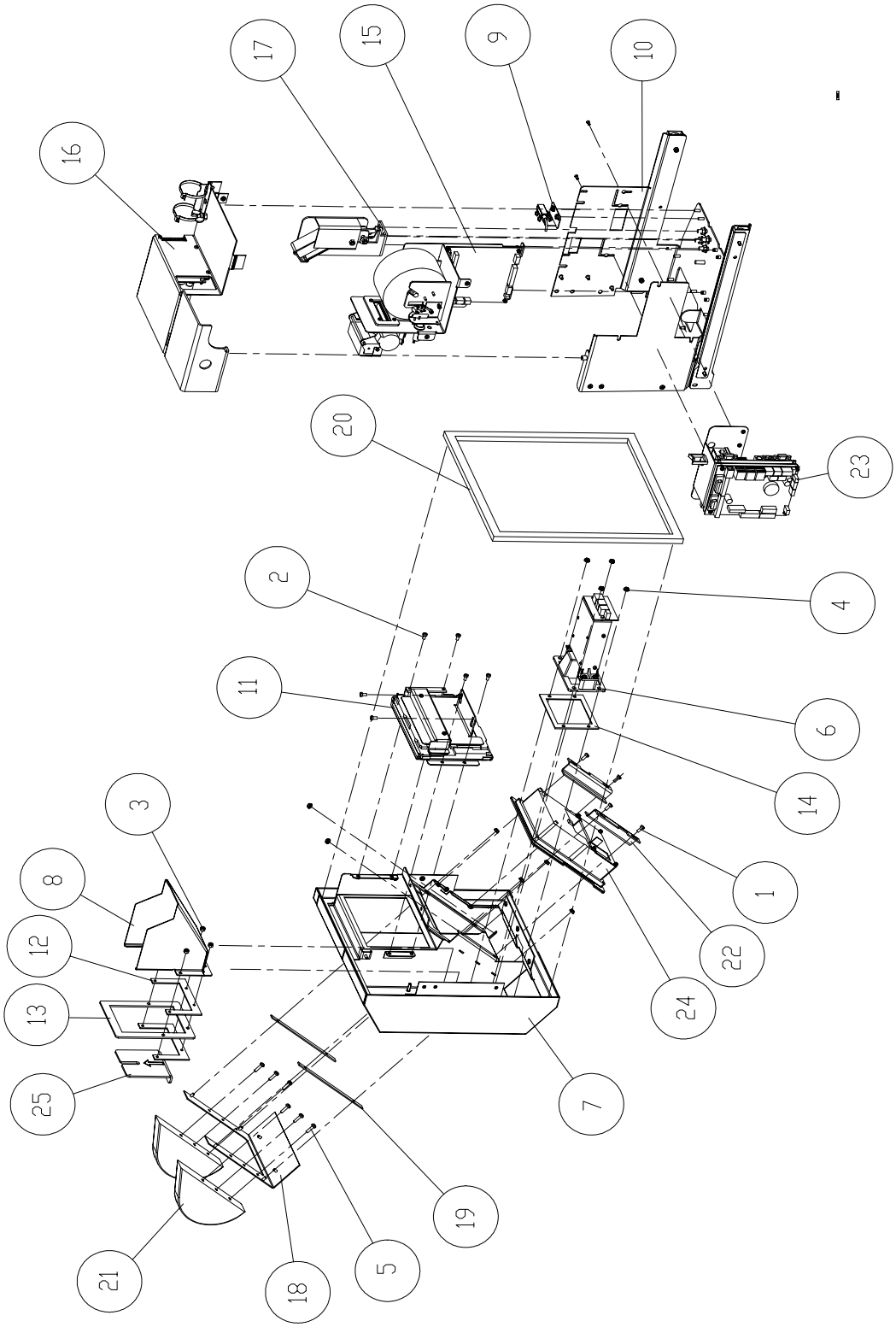

Issue A

4.2 OPT-IQ SPIN with Keypad Assembly

Item No	Description	Désignation Français	Part No	Comments
1	Screw SCH M4x10	M4 x 10 VIS CS / CLS	900007-001	
2	Screw SCH M4x8	M4 x 8 VIS CS / CLS	900007-003	
3	Nut Hex Prev Torque M4	Ecrou Autobloquant M4	900012-004	
4	Nut Hex Self Lock M4	Ecrou serpress M4 x 3	900013-001	
5	Screw CRRCHTF M4x16	Vis CRRCHTF M4x16	900078-003	
6	Cardreader SPIN assy	Lecteur carte SPIN asm	905192	
7	OPT IQ sm-fascia weldassy	OPT IQ sm-fascia weldassy	905338	
8	OPT-IQ ticket bin	OPT-IQ ticket bin	905371	
9	Drawer Alarm assy	Drawer Alarm assy	905379	Refer to Page 3-20
10	OPT IQ support assy	OPT IQ support assy	905581	Refer to Page 3-16
11	OPT IQ capacit. t-screen assy	OPT IQ capacit. t-screen assy	905583	Refer to Page 3-18
12	OPT-IQ printer box seal	OPT-IQ printer box seal	905586	
13	OPT IQ printer door guide	OPT IQ printer door guide	905587	
14	OPT IQ Thales bezel seal	OPT IQ Thales bezel seal	905590	
15	IQ printer assy	IQ printer assy	905591	Refer to Page 3-22
16	OPT IQ raincover assy	OPT IQ raincover assy	905592	Refer to Page 3-26
17	Lock assy IQ	Lock assy IQ	905624	Refer to Page 3-24
18	OPT IQ insert SPIN keypad	OPT IQ insert SPIN keypad	906033	
19	Insert seal OPT-IQ	Insert seal OPT-IQ	906084	
20	Seal drawer front IQ OPT	Seal drawer front IQ OPT	906289	
21	Privacy shield OPT IQ Spin	Privacy shield OPT IQ Spin	906381	
22	OPT IQ SPIN keypad fix bkt	OPT IQ SPIN keypad fix bkt	906408	
23	OPT IQ SBC assy SPIN keypad	OPT IQ SBC assy SPIN keypad	906881	
24	SPIN keypad assy IQ	SPIN keypad assy IQ	906965	
25	Print Door MIL-DIT	Imprimeur Tiroir MD	9400021378	

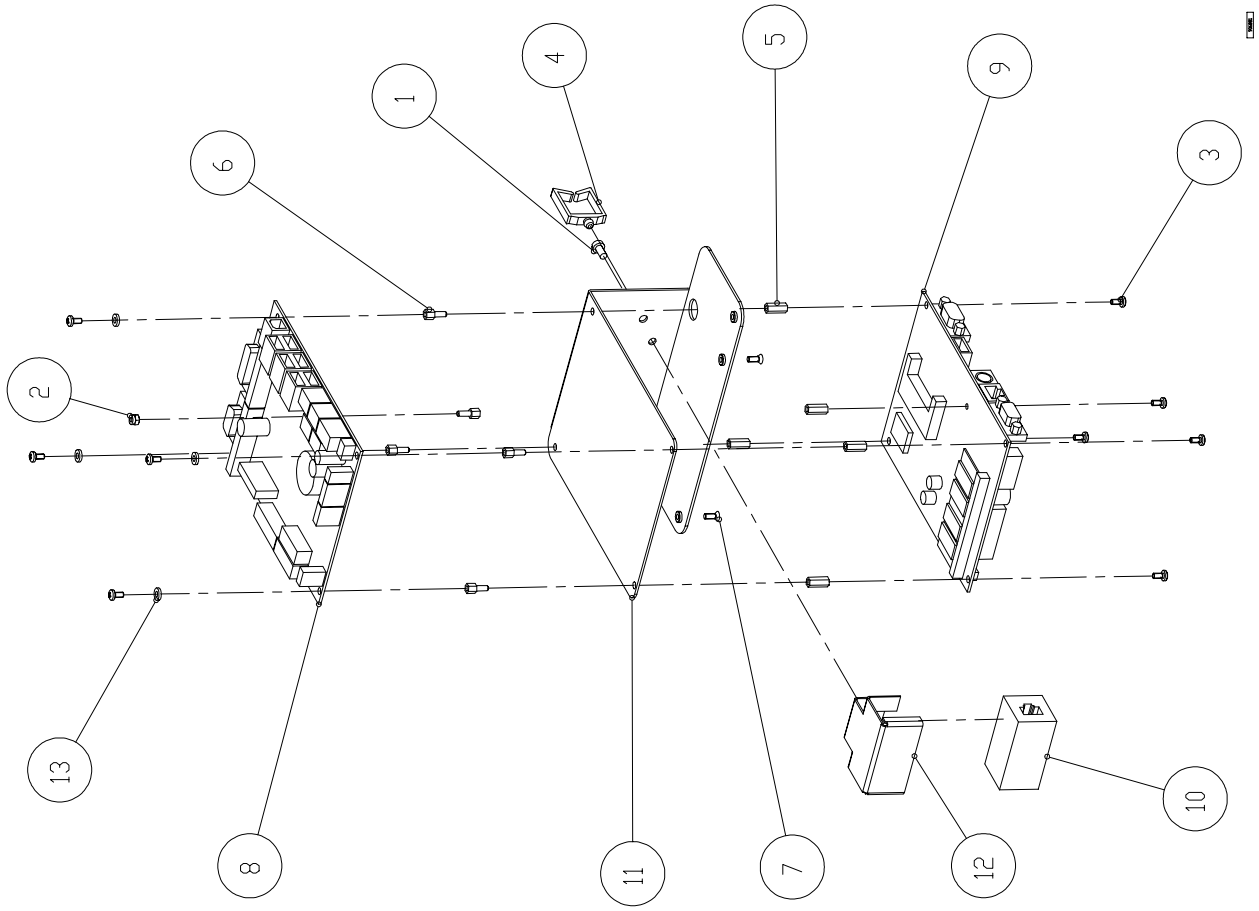

Issue A

4.3 OPT-IQ SBC SPIN with Keypad Assembly

Item No	Description	Désignation Français	Part No	Comments
1	Screw SCH M4x8	M4 x 8 VIS CS / CLS	900007-003	
2	Nut Hex Prev Torque M3	Ecrou Autobloquant M3	900012-001	
3	Screw CRRCH M3x6	Vis CBLZ M3x6	900052-002	
4	Wire clip on base max 19.1	Fixation cable max 19.1	900058-001	
5	Spacer Thr Hex FF M3x12	Entretoise Hex FF M3x12	900711-016	
6	Spacer Thr Hex MF 3x5x3,5x8	Entretoise Hex MF 3x5x3,5x8	900711-021	
7	Screw CRC M3 x 8	Vis FLZ M3 x 8	901323-001	
8	BOARD	BOARD	903492	
9	SBC Axiom 84500 300Mhz	SBC Axiom 84500 300Mhz	903662	
10	Coupler cat 5	Coupler cat 5	904874	
11	OPT IQ bracket SBC	OPT IQ bracket SBC	906042	
12	Bracket coupler cat 5	Support coupler cat 5	906983	
13	Washer PI M3	Rondelle PI M3	9240000748	

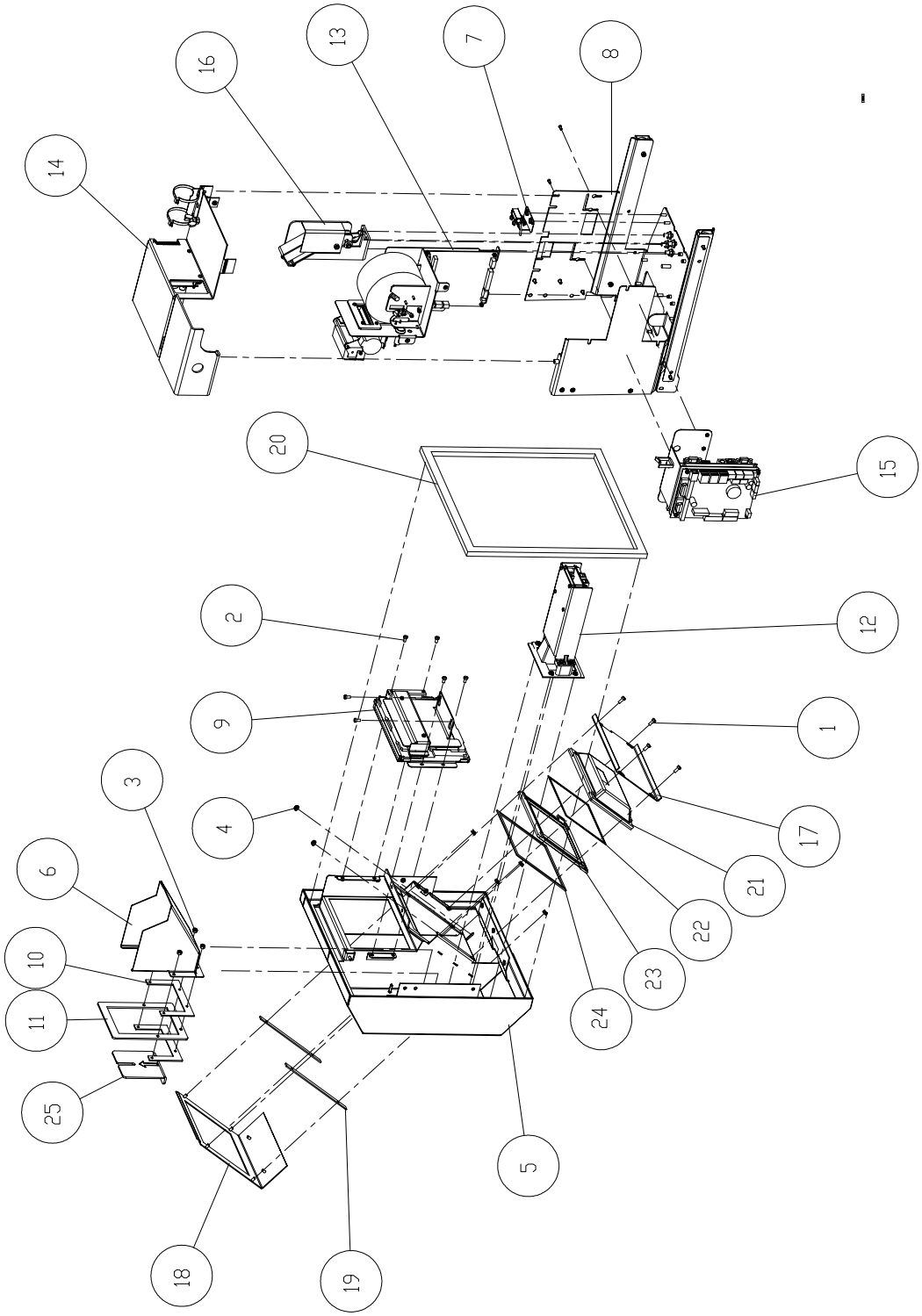

Issue A

4.4 OPT-IQ CRYPTO 100 Assembly

Item No	Description	Désignation Français	Part No	Comments
1	Screw SCH M4x10	M4 x 10 VIS CS / CLS	900007-001	
2	Screw SCH M4x8	M4 x 8 VIS CS / CLS	900007-003	
3	Nut Hex Prev Torque M4	Ecrou Autobloquant M4	900012-004	
4	Nut Hex Self Lock M4	Ecrou serpress M4 x 3	900013-001	
5	OPT IQ sm-fascia weldassy	OPT IQ sm-fascia weldassy	905338	
6	OPT-IQ ticket bin	OPT-IQ ticket bin	905371	
7	Drawer Alarm assy	Drawer Alarm assy	905379	Refer to Page 3-20
8	OPT IQ support assy	OPT IQ support assy	905581	Refer to Page 3-16
9	OPT IQ capacit. t-screen assy	OPT IQ capacit. t-screen assy	905583	Refer to Page 3-18
10	OPT-IQ printer box seal	OPT-IQ printer box seal	905586	
11	OPT IQ printer door guide	OPT IQ printer door guide	905587	
12	OPT IQ ddm assy	OPT IQ ddm assy	905588	
13	IQ printer assy	IQ printer assy	905591	Refer to Page 3-22
14	OPT IQ raincover assy	OPT IQ raincover assy	905592	Refer to Page 3-26
15	OPT IQ sbc assy	OPT IQ sbc assy	905595	Refer to Page 3-12
16	Lock assy IQ	Lock assy IQ	905624	Refer to Page 3-24
17	OPT-IQ bkt Crypto 100	OPT-IQ bkt Crypto 100	906031	
18	OPT IQ insert Crypto 100	OPT IQ insert Crypto 100	906034	
19	Insert seal OPT-IQ	Insert seal OPT-IQ	906084	
20	Seal drawer front IQ OPT	Seal drawer front IQ OPT	906289	
21	Crypto 100 keypad real keys	Crypto 100 keypad real keys	906496	
22	Seal OPT IQ Crypto 100	Seal OPT IQ Crypto 100	906499	
23	Crypto 100 keypad frame	Crypto 100 keypad frame	906700	
24	Seal 2 OPT IQ Crypto 100	Seal 2 OPT IQ Crypto 100	907104	
25	Print Door MIL-DIT	Imprimeur Tiroir MIL-DIT	9400021378	

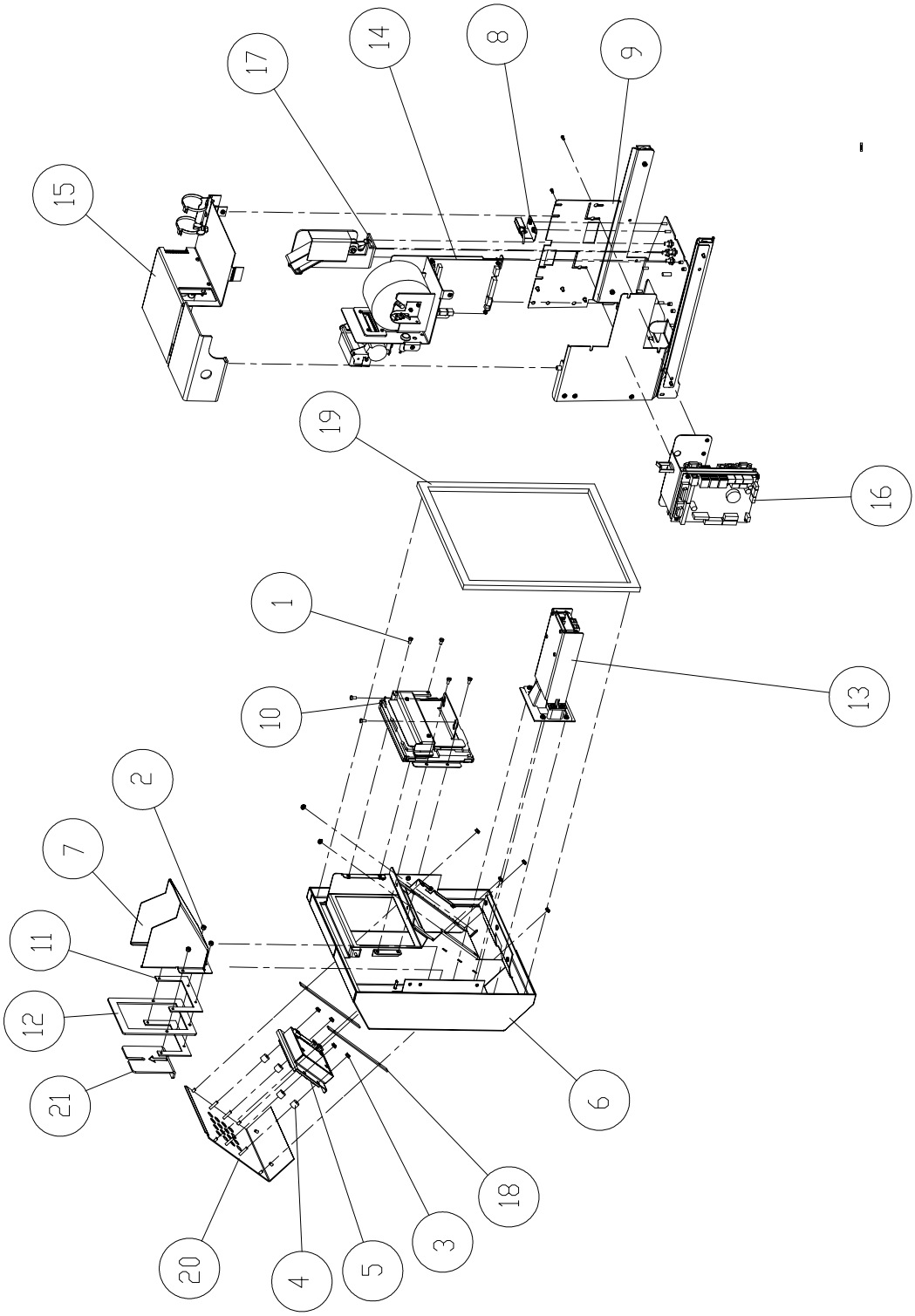

Issue A

4.5 OPT-IQ CRYPTO 200 Assembly

Item No	Description	Désignation Français	Part No	Comments
1	Screw SCH M4x8	M4 x 8 VIS CS / CLS	900007-003	
2	Nut Hex Prev Torque M4	Ecrou Autobloquant M4	900012-004	
3	Nut Hex Self Lock M4	Ecrou serpress M4 x 3	900013-001	
4	OPT 4x4 pinpad plain bush	OPT 4x4 clavier plaine buisson	903237	
5	Crypto 200 PINPAD	Clavier Crypto 200	904716	
6	OPT IQ sm-fascia weldassy	OPT IQ sm-fascia weldassy	905338	
7	OPT-IQ ticket bin	OPT-IQ ticket bin	905371	
8	Drawer Alarm assy	Drawer Alarm assy	905379	Refer to Page 3-20
9	OPT IQ support assy	OPT IQ support assy	905581	Refer to Page 3-16
10	OPT IQ capacit. t-screen assy	OPT IQ capacit. t-screen assy	905583	Refer to Page 3-18
11	OPT-IQ printer box seal	OPT-IQ printer box seal	905586	
12	OPT IQ printer door guide	OPT IQ printer door guide	905587	
13	OPT IQ ddm assy	OPT IQ ddm assy	905588	
14	IQ printer assy	IQ printer assy	905591	Refer to Page 3-22
15	OPT IQ raincover assy	OPT IQ raincover assy	905592	Refer to Page 3-26
16	OPT IQ sbc assy	OPT IQ sbc assy	905595	Refer to Page 3-12
17	Lock assy IQ	Lock assy IQ	905624	Refer to Page 3-24
18	Insert seal OPT-IQ	Insert seal OPT-IQ	906084	
19	Seal drawer front IQ OPT	Seal drawer front IQ OPT	906289	
20	OPT-IQ insert Crypto 200	OPT-IQ insert Crypto 200	906314	
21	Print Door MIL-DIT	Imprimeur Tiroir MD	9400021378	

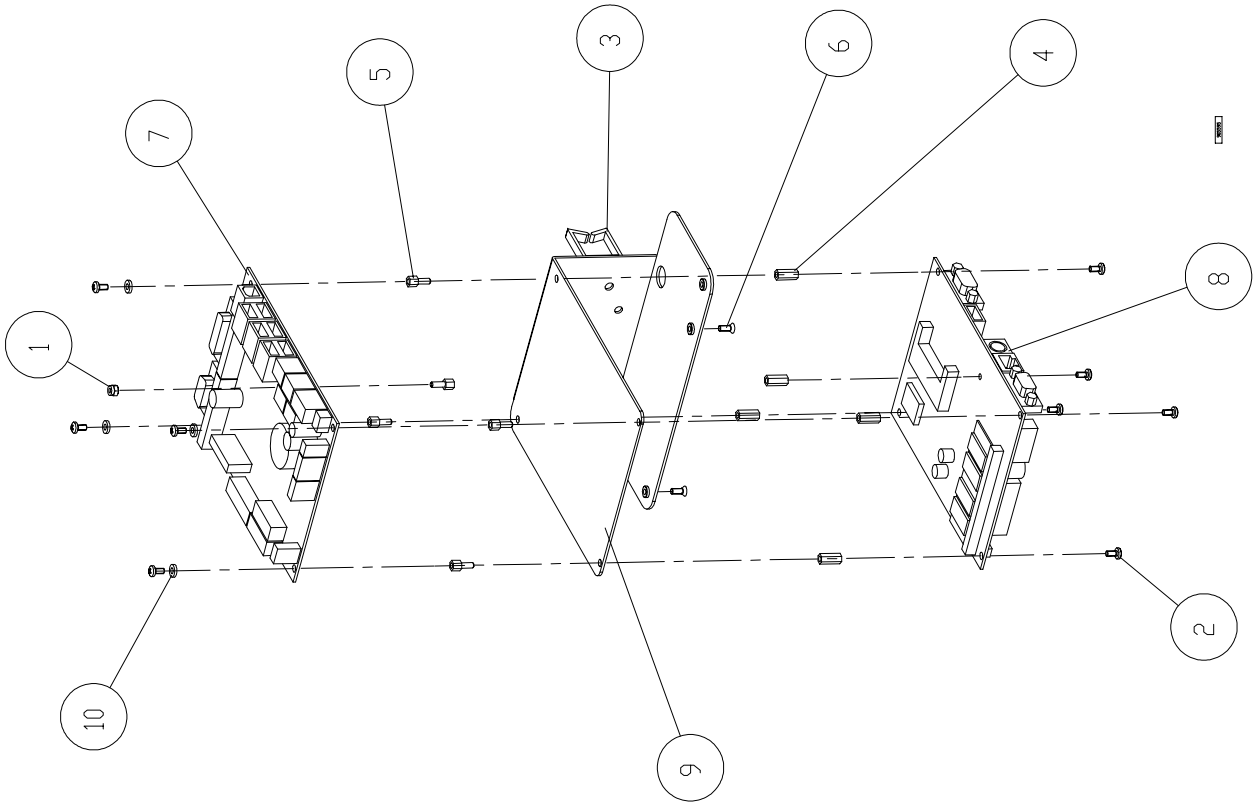

Issue A

4.6 OPT-IQ SBC Assembly

Item No	Description	Désignation Français	Part No	Comments
1	Nut Hex Prev Torque M3	Ecrou Autobloquant M3	900012-001	
2	Screw CRRCH M3x6	Vis CBLZ M3x6	900052-002	
3	Wire clip on base max 19.1	Fixation cable max 19.1	900058-001	
4	Spacer Thr Hex FF M3x12	Entretoise Hex FF M3x12	900711-016	
5	Spacer Thr Hex MF 3x5x3,5x8	Entretoise Hex MF 3x5x3,5x8	900711-021	
6	Screw CRC M3 x 8	Vis FLZ M3 x 8	901323-001	
7	BOARD	BOARD	903492	
8	SBC Axiom 84500 300Mhz	SBC Axiom 84500 300Mhz	903662	
9	OPT IQ bracket SBC	OPT IQ bracket SBC	906042	
10	Washer PI M3	Rondelle PI M3	9240000748	

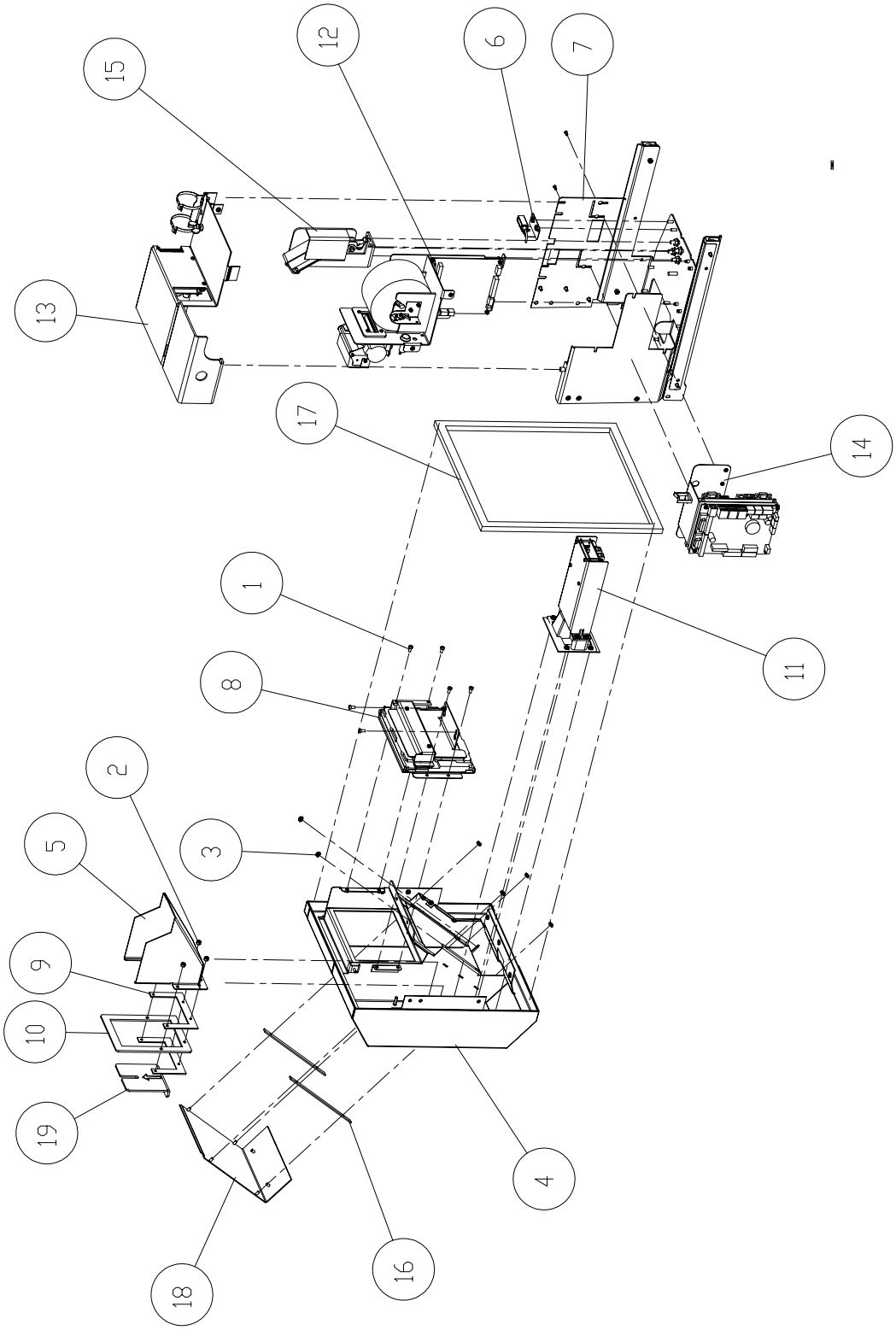

Issue A

4.7 OPT Drawer without Keypad Assembly

Item No	Description	Désignation Français	Part No	Comments
1	Screw SCH M4x8	M4 x 8 VIS CS / CLS	900007-003	
2	Nut Hex Prev Torque M4	Ecrou Autobloquant M4	900012-004	
3	Nut Hex Self Lock M4	Ecrou serpress M4 x 3	900013-001	
4	OPT IQ sm-fascia weldassy	OPT IQ sm-fascia weldassy	905338	
5	OPT-IQ ticket bin	OPT-IQ ticket bin	905371	
6	Drawer Alarm assy	Drawer Alarm assy	905379	Refer to Page 3-20
7	OPT IQ support assy	OPT IQ support assy	905581	Refer to Page 3-16
8	OPT IQ capacit. t-screen assy	OPT IQ capacit. t-screen assy	905583	Refer to Page 3-18
9	OPT-IQ printer box seal	OPT-IQ printer box seal	905586	
10	OPT IQ printer door guide	OPT IQ printer door guide	905587	
11	OPT IQ ddm assy	OPT IQ ddm assy	905588	
12	IQ printer assy	IQ printer assy	905591	Refer to Page 3-22
13	OPT IQ raincover assy	OPT IQ raincover assy	905592	Refer to Page 3-26
14	OPT IQ sbc assy	OPT IQ sbc assy	905595	Refer to Page 3-12
15	Lock assy IQ	Lock assy IQ	905624	Refer to Page 3-24
16	Insert seal OPT-IQ	Insert seal OPT-IQ	906084	
17	Seal drawer front IQ OPT	Seal drawer front IQ OPT	906289	
18	OPT IQ keyp. insert blindplate	OPT IQ keyp. insert blindplate	906548	
19	Print Door MIL-DIT	Imprimeur Tiroir MD	9400021378	

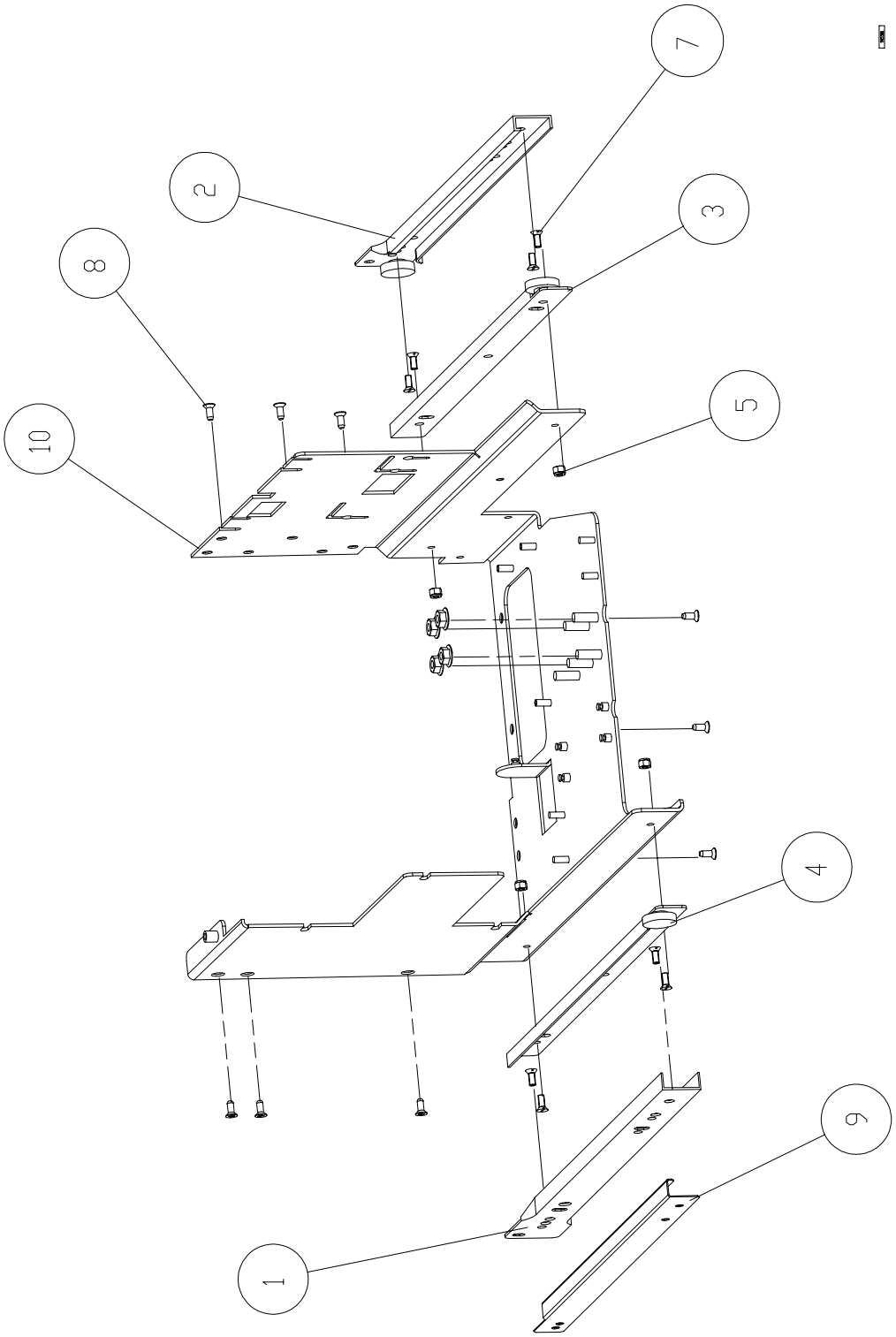

Issue A

4.8 OPT-IQ Support Assembly

Item No	Description	Désignation Français	Part No	Comments
1	Drawer Rail	Tiroir Raille	5566000086A	
2	Drawer Rail	Tiroir Raille	5566000086B	
3	Drawer Rail	Tiroir Raille	5566000086C	
4	Drawer Rail	Tiroir Raille	5566000086D	
5	Nut Hex Prev Torque M4	Ecrou Autobloquant M4	900012-004	
6	Nut Hex Self Lock M6	Ecrou autobloquant Flange M6 x	900013-003	
7	Screw SCS M4x10	VIS FS M4x10	900014-009	
8	Screw Cr Rec Csk Thrdform m4x1	Vis Auto Tara Fraisee Fendue m	904062-001	
9	OPT Drawer reinforcement	Renfort de tiroir OPT	905038	
10	Support Bracket Front	Support Bracket Front	905711	

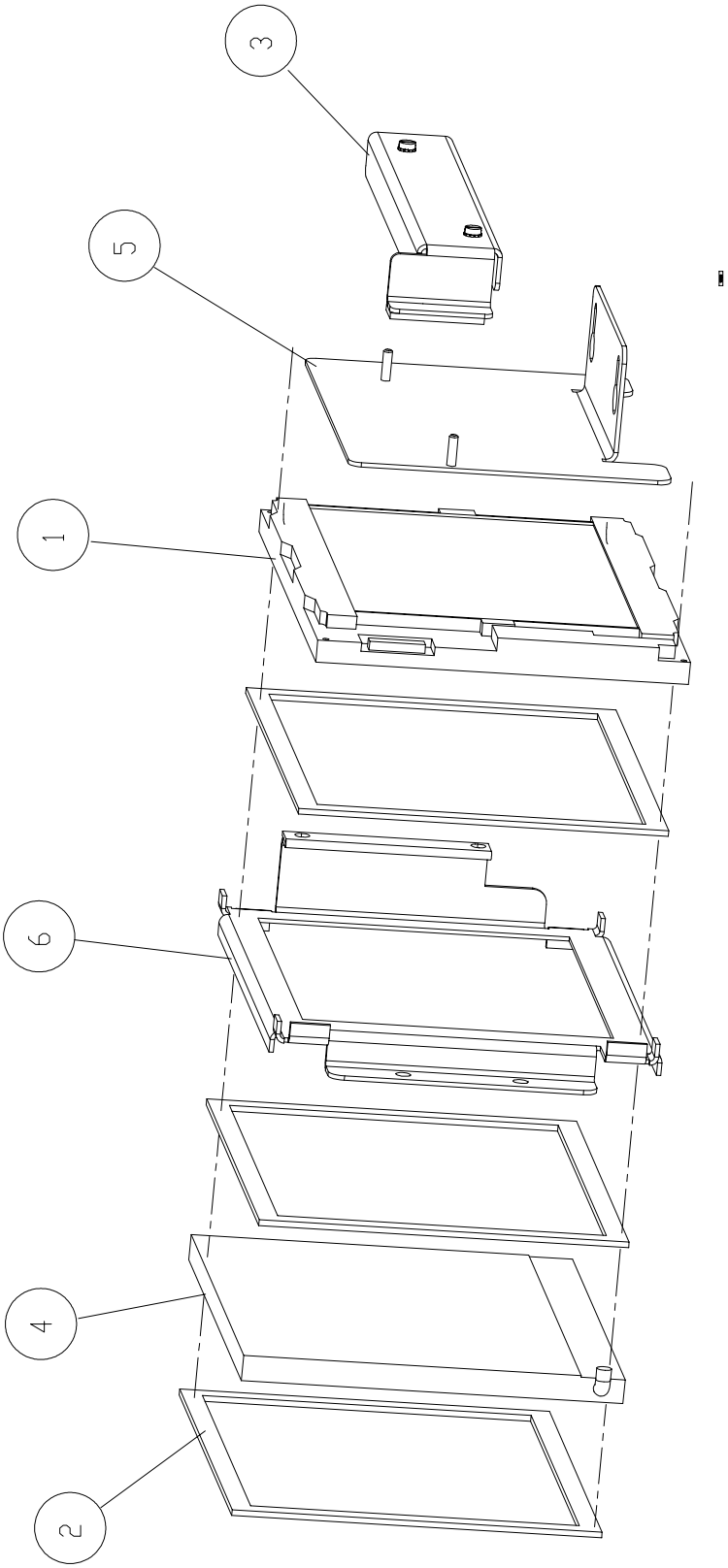

Issue A

4.9 OPT-IQ Capacitive Touch Screen Assembly

Item No	Description	Désignation Français	Part No	Comments
1	Sharp VGA screen	Sharp VGA screen	5586000558	
2	OPT-IQ touchscreen seal	OPT-IQ touchscreen seal	905584	
3	OPT-IQ vga backlight assy	OPT-IQ vga backlight assy	905585	Refer to Page 3-28
4	Touchscreen 6.4" Capacitive	Touchscreen 6.4" Capacitive	905620	
5	Screen fixing bracket	Screen fixing bracket	906077	
6	OPT-IQ screen bracket	OPT-IQ screen bracket	906078	

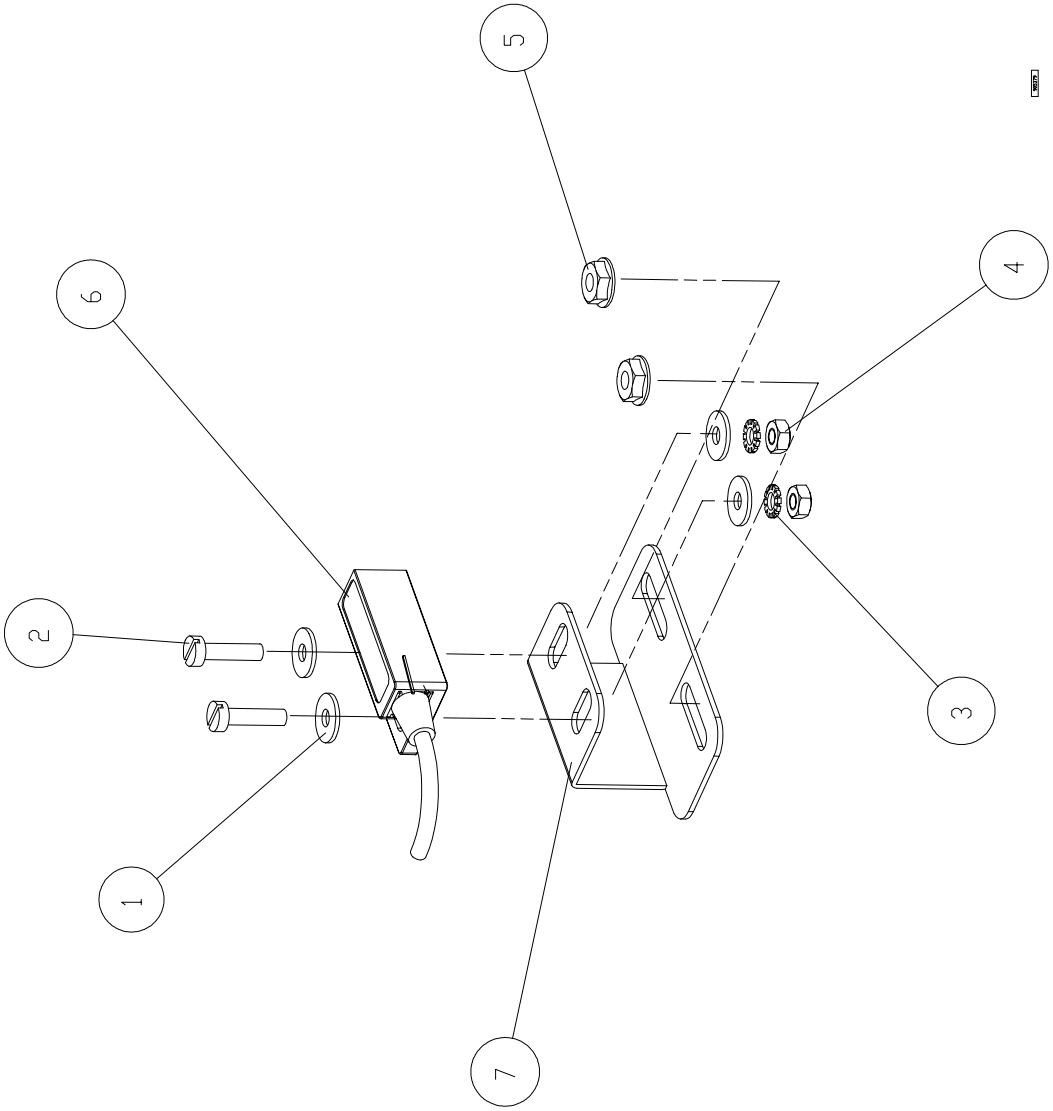

Issue A

4.10 OPT-IQ Drawer Alarm Assembly

Item No	Description	Désignation Français	Part No	Comments
1	Plain Washer D2=3XD1 M3	Rondelle D2=3XD1 M3	5511000144	
2	Screw SCH M3x12	Vis CS M3x12	900007-010	
3	Washer Serr Lock Ext M3	Rondelle a Dents DEC M3	900009-006	
4	Nut Hex M3	Ecrou H M3	900011-008	
5	Nut Hex Self Lock M4	Ecrou Bride Autobloquant M4	900013-001	
6	Hall Effect Sensor Add 1	Hall Effect Sensor Add 1	903410-001	
7	Bracket Alarm OPT Drawer	Bracket Alarm OPT Drawer	905376	

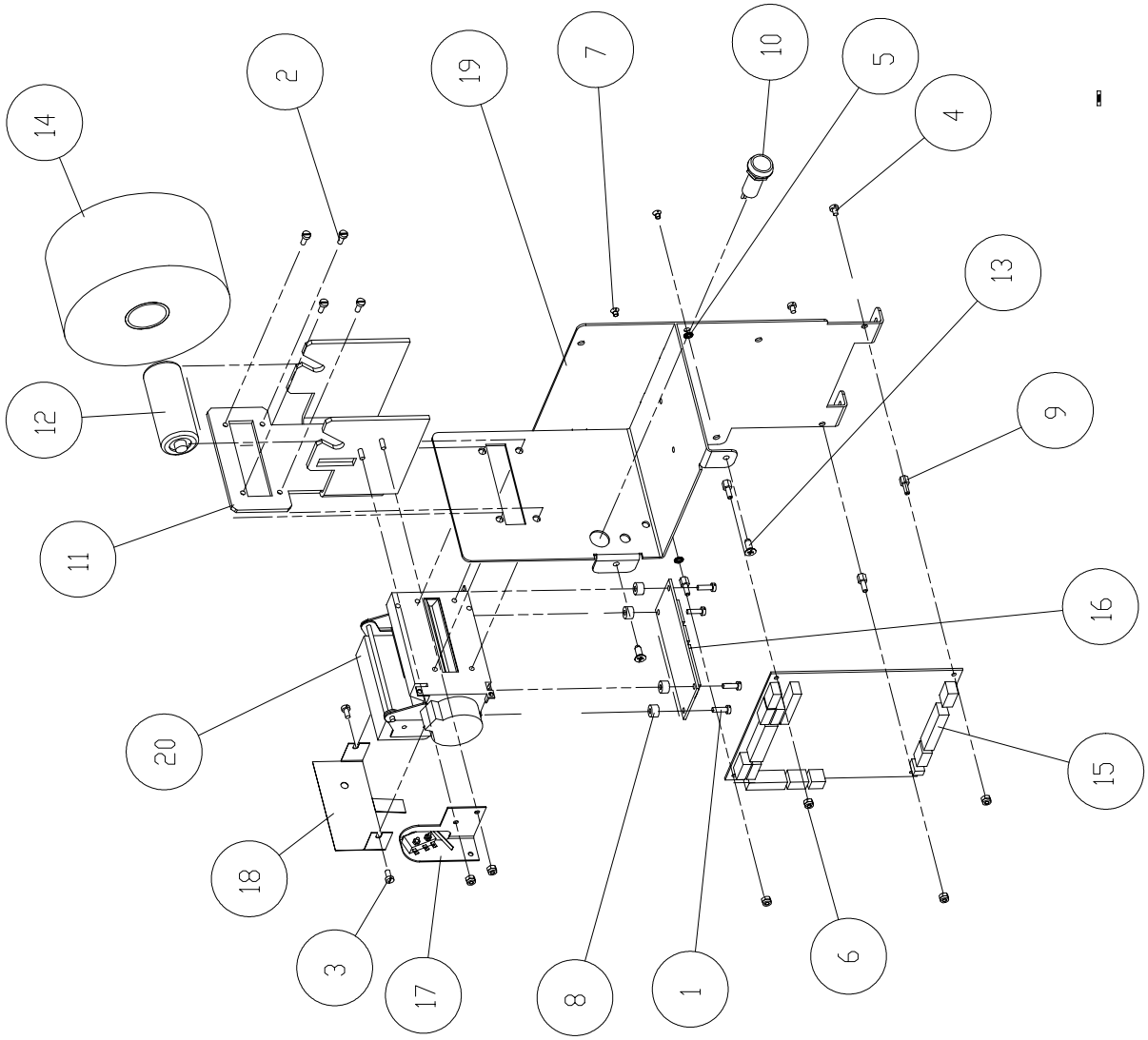

Issue A

4.11 OPT-IQ Printer Assembly

Item No	Description	Désignation Français	Part No	Comments
1	Slotted Cheese Head Screw M3x10	Vis a tete cylindrique fendue M3x10	5511000123	
2	Screw SCH M3x8	M3 x 8 vis t.cylindr. fendue	900007-008	
3	Screw SCH M3x6	Vis CS M3x6	900007-017	
4	Screw Slotted Cheese Head M3x4	Vis CS M3x4	900007-018	
5	Washer serr lock ext M3	Rondelle éventail M3	900009-006	
6	Nut Hex Prev Torque M3	Ecrou Autobloquant M3	900012-001	
7	Screw Slotted Countersunk M3x4	VIS FS M3x4	900014-012	
8	Spacer 3.2x8x5	Entretoise cyl. 3.2x8x5	900024-011	
9	Spacer Thr Hex MF 3x5x3,5x8	Entretoise Hex MF 3x5x3,5x8	900711-021	
10	Push button black	Le bouton de pression noir	901934-001	
11	OPT paper bracket	OPT tapisser encadrer	903146	
12	OPT paper roller	OPT tapisser laminoir	903147	
13	Screw Cr Rec Csk Thrdform M4x10	M4x10	904062-001	
14	Paper Roll 113	Tapisser Rouleau 113	906691-002	
15	EM7000 Printer PCB	EM7000 Imprimeur PCB	9210012952	
16	Printer Connection Board	Raccordement Imprimeur Monte	9210121188	
17	OPT Paper Low Option	OPT Tapisse Optione Basse	9221420434	
18	Paper Guide Slimline	Tapisser Guide Slimline	9400017050	
19	Printer Plate MD	Imprimeur Plaquer MD	9400021381	
20	Citizen Printer Assy	Citizen Imprimeur Asm	9701170774	

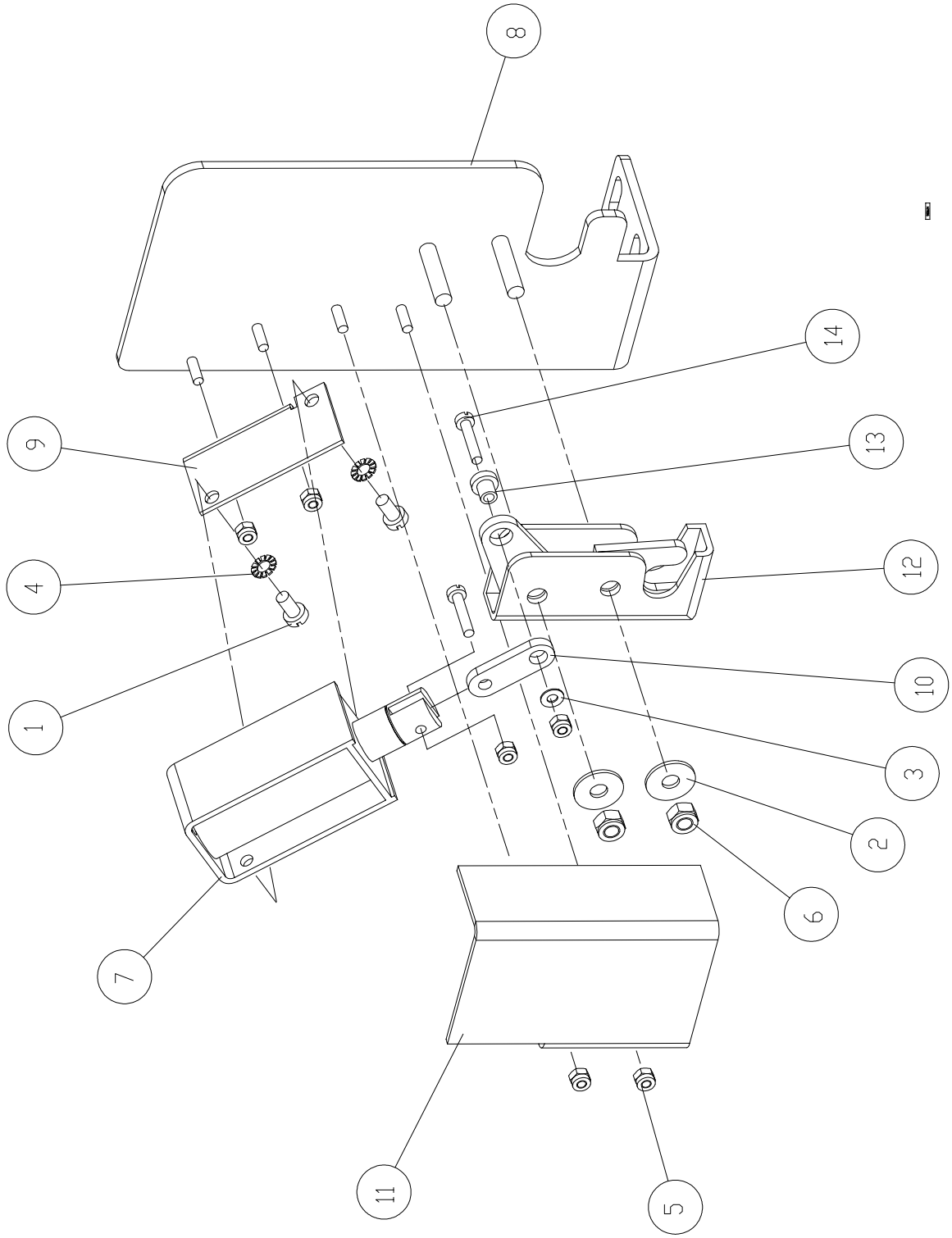

Issue A

4.12 OPT-IQ Lock Assembly

Item No	Description	Désignation Français	Part No	Comments
1	Screw SCH M4x8	Vis CS M4x8	900007-003	
2	Washer Pl d2=3xdl M5	Rondelle Pl d2=3xdl M5	900008-008	
3	Washer Pl M3	Rondelle Pl M3	900008-010	
4	Washer Serr Lock Ext M4	Rondelle a Dents DEC M4	900009-001	
5	Nut Hex Prev Torque M3	Ecrou Frein M3	900012-001	
6	Nut Hex Prev Torque M5	Ecrou Frein M5	900012-002	
7	NL Lock Solenoid	NL Lock Solenoid	905186	
8	NL Lock Bracket	NL Verouiller Encadrer	905211	
9	NL Lock Solenoid Mount	NL Lock Solenoid Mont	905212	
10	NL Lock Link	NL Lock Link	905213	
11	NL Lock Cover	NL Lock Couvrir	905214	
12	Eberhard Rotary Latch	Eberhard Rotary Latch	905232	
13	Nylon Bearing Skiffy 008-0300	Nylon Bearing Skiffy 008-0300	9220117457	
14	Screw SCH M3x16	Vis CS M3x16	9240000073	

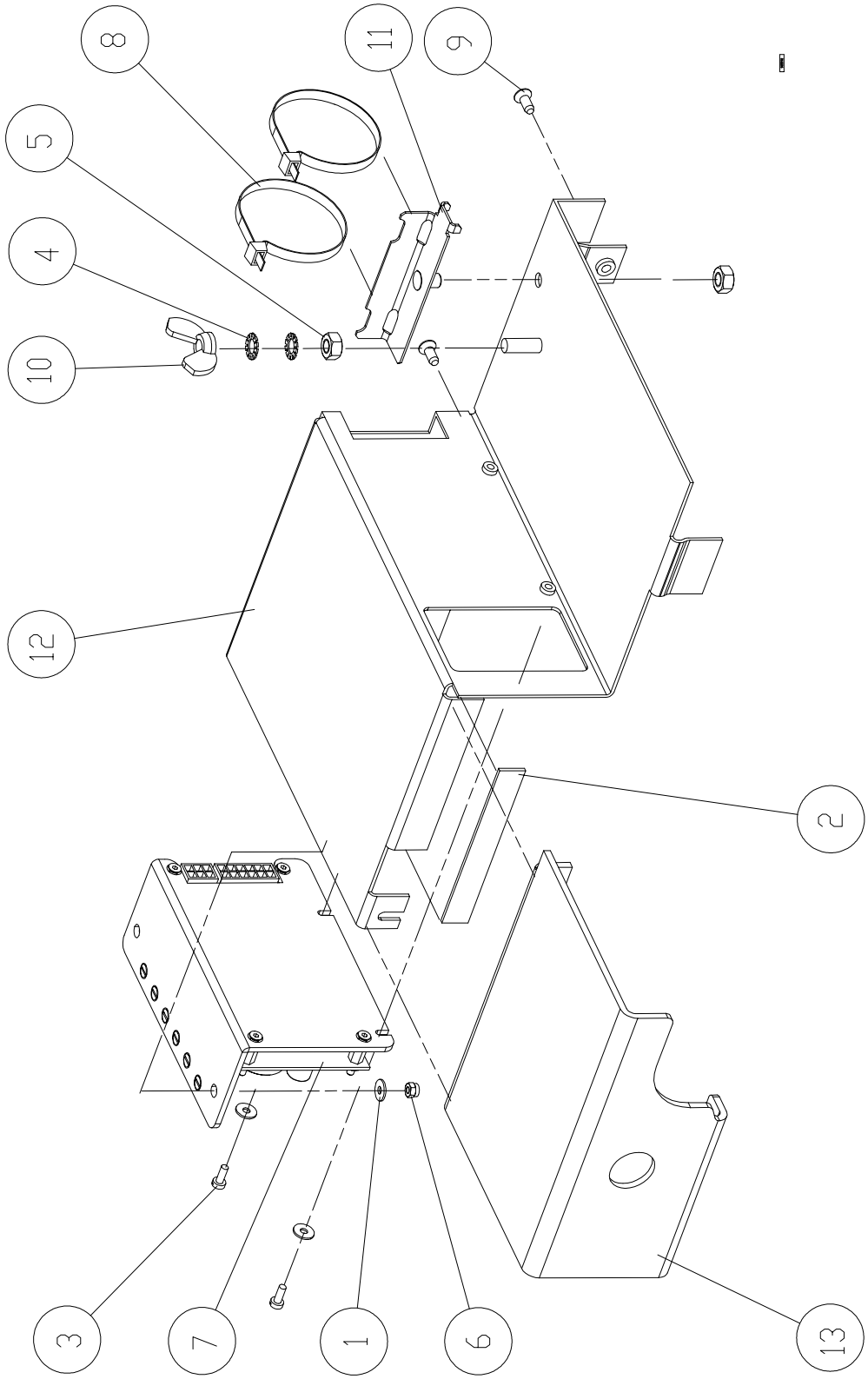

Issue A

4.13 OPT-IQ Raincover Assembly

Item No	Description	Désignation Français	Part No	Comments
1	Plain washer D2=3XD1 M3	Rondelle Pl D2=3XD1 M3	5511000144	
2	Magstrip 85mm	Magstrip 85mm	5566000113-85	
3	Screw SCH M3x8	Vis CS M3x8	900007-008	
4	Washer Serr Lock Ext M6	Rondelle a Dents DEC M6	900009-004	
5	Nut Hex M6	Ecrou H M6	900011-001	
6	Nut Hex Prev Torque M3	Ecrou Frein M3	900012-001	
7	ASSY/OPT/LPSU	ASSY/OPT/LPSU	902710	
8	TY-WRAP 196 x 4.8	Serre-cable 196 x 4.8	903469-001	
9	Screw CRCTH M4x10	Vis ATFRFE M4x10	904062-001	
10	Wing Nut M6	Ecrou Oreilles M6	904078-001	
11	Cable Fixing Assy	Cable encadrer Asm	904663	
12	OPT-IQ Raincover	OPT-IQ Raincover	905593	
13	OPT-IQ Printer Box Cover	OPT-IQ Imprimeur Boite Couvercle	905594	

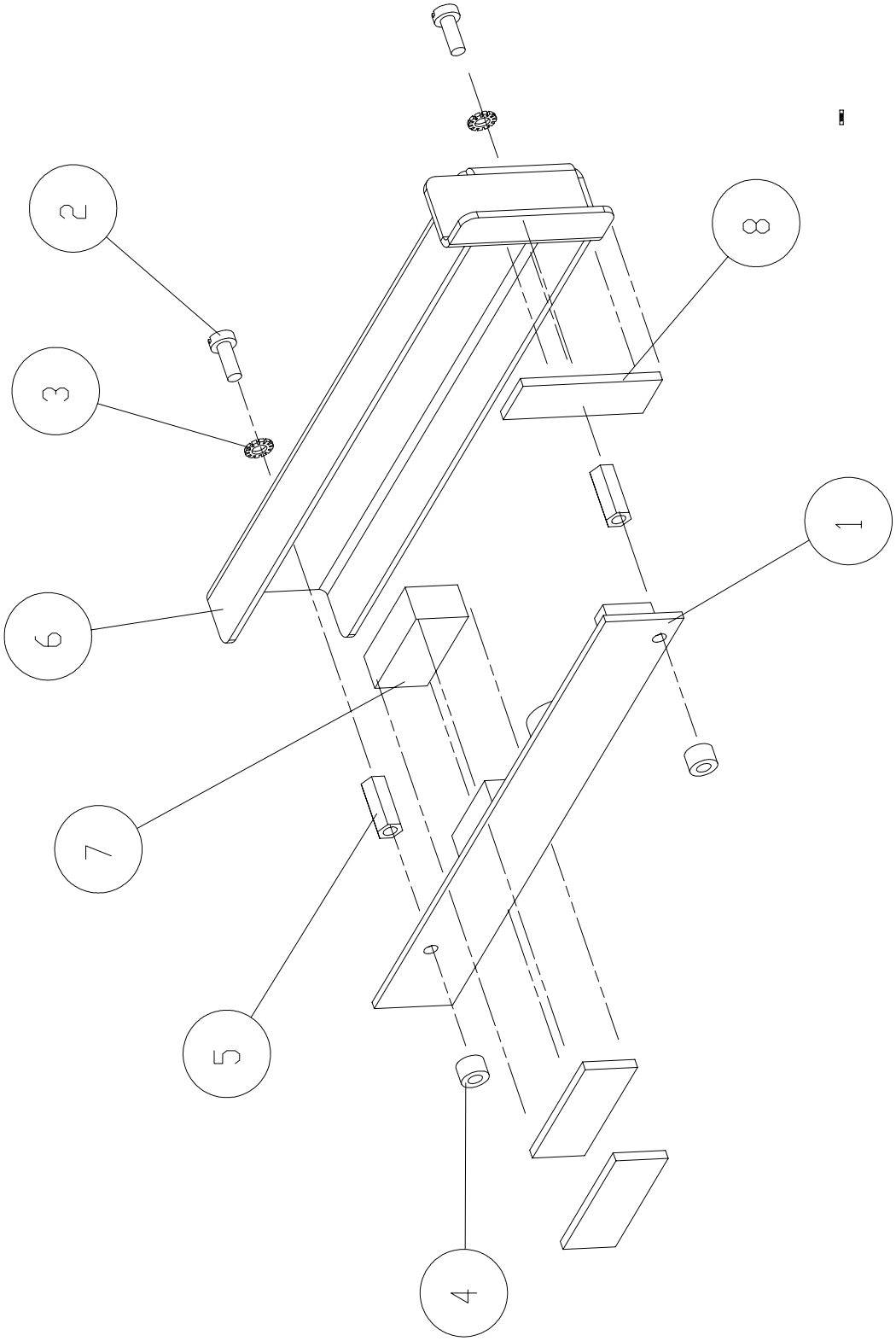

Issue A

4.14 OPT-IQ VGA Backlight Assembly

Item No	Description	Désignation Français	Part No	Comments
1	VGA Inverter TDK CXA 0214	VGA Inverter TDK CXA 0214	5586000555	
2	Screw SCH M3x8	Vis CS M3x8	900007-008	
3	Washer Serr Lock Ext M3	Rondelle a Dents DEC M3	900009-006	
4	Spacer 3.1x6x4	Entretoise Cyl 3.1x6x4	900024-009	
5	Spacer Thr Hex FF M3x12	EntretoiseHex FF M3x12	900711-016	
6	OPT-IQ VGA Backlight Cover	OPT-IQ Capot VGA Inverter	905369	
7	CR Foam Insulator 25x12x8	CR Foam Insulator 25x12x8	905417	
8	CR Foam Insulator 32x12x2	CR Foam Insulator 32x12x2	905418	

This page is intentionally blank

This page is intentionally blank

NL ***Spare Parts***
Koppens Automatic (Bladel)
Industrieweg 5
5531 AD Bladel
The Netherlands
☎ +31 497 389 555
🗐 +31 497 381 950

GB ***Manufacturing***
Unit 3, Baker Road
West Pitkerro Industrial Estate
Dundee DD5 3RT
Scotland
☎ +44 (0)1382 598000
🗐 +44 (0)1382 598001

F ***Manufacturing***
Route de Soliers
14540 Grentheville
BP268, Caen Cedex 14013
France
☎ +33 231 15 15 15
🗐 +33 231 23 15 06

SALES & SERVICE DIVISIONS - EUROPE

A **Austria**
Tokheim
Eitzenberger Straße 4-6
A-2544 Leobersdorf
☎ +43 (0) 2256 606 0
🗐 +43 (0) 2256 606 170
✉ office@leobersdorf.tokheim.com

B **Belgium**
Tokheim
Everdongenlaan 31
2300 Turnhout
☎ +32 (0) 14 44 85 00
🗐 +32 (0) 14 44 85 55
✉ saelen@turnhout.tokheim.com

CZ **Czech Republic**
Tokheim
Pernerova 48
CZ-18602 Prague 8
☎ +420 2 248 90312
🗐 +420 2 232 72 67
✉ pribrsky@prague.tokheim.com

DK **Denmark & Scandinavia**
Tokheim Scandinavia A/S
Hejrevang 10
3450 Allerød
☎ +45 48 13 45 45
🗐 +45 48 17 45 96
✉ service@alleroed.tokheim.com

F **France**
Tokheim Services France
9 Avenue Galilée
92350 Le Plessis-Robinson
☎ +33 (0)1 41 36 13 00
🗐 +33 (0)1 41 36 13 70
✉ info@tokheim-services.com

F ***Tokheim Europe & Africa Headquarters***
ZAC Paris Nord 2
B.P. 40027 Tremblay-en-France
95912 Roissy C.D.G. Cedex
☎ +33 (0)1 49 90 77 00
🗐 +33 (0)1 49 90 77 77
✉ marcom@tremblay.tokheim.com

D **Germany**
Tokheim GmbH
Lothstrasse 1a
D-80335 München
☎ +49 (0) 89 189 530
🗐 +49 (0) 89 189 533 99
✉ service@muenchen.tokheim.com

I **Italy**
Tokheim Sofitam Italia S.r.l.
S.P. 26 Km 10 800
14030 Scurzolengo (AT)
☎ +39 0141 2038200
🗐 +39 0141 2038222
✉ info@asti.tokheim.com

NL **Netherlands**
Tokheim Netherlands B.V.
Touwslagerstraat 17
Postbus 4186
2980 GD Ridderkerk
☎ +31(0) 180 48 15 00
🗐 +31(0) 180 48 15 55
✉ sales@ridderkerk.tokheim.com

PL **Poland**
Pol-Germann Tokheim Sp. z.o.o.
UL. Narwicka 1
PL-80-557 Gdansk
☎ +48 58 343 21 71
🗐 +48 58 343 22 15
✉ plgerma@softel.gda.pl

P **Portugal**
G.N.C.
Parque de Ciencia e Tecnologia
Edificio Tecnologia 1, N° 27
2780-920 Oeiras
Lisboa
☎ +351 214 220 420
🗐 +351 214 214 226

RUS **Russia**
Tokheim Representative Office
Room 380, Hotel "Ukraina"
Kutuzovski Prospekt, 2/1
Stroyenie 1
Moscow 121249
☎ +7 095 933 69 35
🗐 +7 095 933 69 34
✉ kolobov@dol.ru

SK **Slovak Republic**
Tokheim
Mlynske Nivy 70
SK-82015 Bratislava
☎ +421 2 58 27 02 15
🗐 +421 2 52 41 41 23
✉ schroeder@berlin.tokheim.com

E **Spain**
Koppens Iberica
Calle Imprenta 5
Poligono Industrial de Alcobendas
28100 Alcobendas (Madrid)
☎ +34 91 661 28 13
🗐 +34 91 661 41 30
✉ urra@madrid.tokheim.com

CH **Switzerland**
Tokheim
Route du Crochet 7
Case Postale 50
1762 Givisiez
☎ +41 (0)26 460 51 11
🗐 +41 (0)26 460 51 12
✉ user@givisiez.tokheim.com

GB **United Kingdom**
Unit 1, Baker Road
West Pitkerro Industrial Estate
Dundee DD5 3RT
Scotland
☎ +44 (0)1382 483500
🗐 +44 (0)1382 731835
✉ service@tokheimuk.com

AFRICA

F **Export Division**
ZAC Paris Nord 2
B.P. 40027 Tremblay-en-France
95912 Roissy C.D.G. Cedex
France
☎ +33 (0)1 49 90 77 56
🗐 +33 (0)1 49 90 77 93
✉ marcom@tremblay.tokheim.com

RFC **Cameroon**
Socatam S.A.
BP 3941
Douala
☎ +237 40 57 86
🗐 +237 40 57 88
✉ socatam.douala@camnet.cm

MA **Morocco**
Matam S.A
209 Bld Moulay Ismail
Route de Rabat
Casablanca
☎ +212 22 40 40 24
🗐 +212 22 40 40 21
✉ matam@wanadoo.net.ma

SN **Senegal**
Cosetam S.A.
Quartier de Bel Air
Route des Hydrocarbures
BP 1237
Dakar
☎ +221 832 23 71
🗐 +221 832 68 34
✉ cosetam@ns.arc.sn

ZA **South Africa**
Tokheim South Africa Ltd
Stand 110, Precision Road
Kya Sand, Randburg
☎ +27 11 462 2105
🗐 +27 11 462 1942
✉ tokheimsales@tokheim.co.za

TN **Tunisia**
Cottam SARL
116 Ave de l'Union du Maghreb Arabe
BP 117
La Soukra
2036 Tunis
☎ +216 175 95 50
🗐 +216 175 95 30
✉ cottam@cottam.com.tn

As Tokheim regularly improves its products to ever better respond to evolving market and regulatory requirements, it reserves the right to change any of the specifications of these products, and this without prior notice.

For technical manual enquiries, contact: author@dundee.tokheim.com